V1.5-2026-09-04

Residential All-In-One Energy Storage System

ESA 5-30kW

GW5.1-BAT-D-G20
GW8.3-BAT-D-G20
GW5.1-BAT-D-G21
GW8.3-BAT-D-G21
GW6.0-BAT-D-G20
GW9.0-BAT-D-G20

Solutions Manual

GOODWE

Copyright Statement

Copyright Statement

Copyright© GoodWe Technologies Co., Ltd. 2026. All rights reserved.

Without the authorization of GoodWe Technologies Co., Ltd., no part of this manual may be reproduced, distributed, or uploaded to third-party platforms such as public networks in any form.

Trademark Authorization

GOODWE and other GOODWE trademarks used in this manual are owned by GoodWe Technologies Co., Ltd. All other trademarks or registered trademarks mentioned in this manual belong to their respective owners.

NOTICE

Due to product version upgrades or other reasons, the content of this document is updated periodically. Unless otherwise agreed, the content of this document cannot replace the safety precautions on the product label. All descriptions in the document are for guidance only.

About This Manual

Over view

This document primarily introduces an energy storage system consisting of an inverter, a battery system, a static transfer switch cabinet (hereinafter referred to as STS), and a smart meter. It covers product information, installation and wiring, configuration, testing and commissioning, as well as troubleshooting and maintenance. Please read this manual carefully before installing or using the product to under stand safety information and familiarize yourself with the product's functions and features. This manual may be updated periodically; please visit the official website for the latest version and additional product information.

Applicable Products

The energy storage system includes the following products:

Product Type	Product Information	Description
inverter	GW5K-ETA-G20 GW6K-ETA-G20 GW8K-ETA-G20 GW9.999K-ETA-G20 GW10K-ETA-G20 GW12K-ETA-G20 GW15K-ETA-G20 GW20K-ETA-G20 GW25K-ETA-G20 GW29.999K-ETA-G20 GW30K-ETA-G20 GW5K-BTA-G20 GW6K-BTA-G20 GW8K-BTA-G20 GW9.999K-BTA-G20 GW10K-BTA-G20 GW12K-BTA-G20 GW15K-BTA-G20 GW20K-BTA-G20 GW25K-BTA-G20 GW29.999K-BTA-G20 GW30K-BTA-G20	Rated Output Power: 5 kW - 30 kW
battery system	GW5.1-BAT-D-G20 GW5.1-BAT-D-G21	Rated energy 5.12 kWh
	GW8.3-BAT-D-G20 GW8.3-BAT-D-G21	Rated energy 8.32kWh
	GW6.0-BAT-D-G20	Rated energy 6 kWh

Product Type	Product Information	Description
	GW9.0-BAT-D-G20	Rated energy 9kWh
Static Transfer Switch Cabinet (STS)	GW30K-STS-G10	Rated output power: 30 kW (grid side)
	GW60K-STS-G10	Rated output power: 60kW (grid side)
electricity meter	GMK330 GM330	In energy storage systems, the monitoring module can detect information such as operating voltage and current.
communication module	WiFi/LAN Kit-20	System operation information can be uploaded to the monitoring platform via WiFi or LAN signals.
	4G Kit-G20	The system operation information can be uploaded to the monitoring platform via 4G.

Symbol Definition

⚠DANGER
Indicates a highly potential danger that, if not avoided, will result in death or serious injury.
⚠WARNING
Indicates a moderately potential danger that, if not avoided, may result in death or serious injury.
⚠CAUTION
Indicates a low potential danger that, if not avoided, may result in moderate or minor injury.
NOTICE

Emphasizes and supplements the content, and may also provide tips or tricks for optimizing product use, helping you solve a problem or save your time.

Table of Contents

1 Safety Precautions 12
1.1 General Safety 12
1.2 personnel requirements 13
1.3 System Safety 14
1.3.1 PV String Safety 16
1.3.2 Inverter Safety 17
1.3.3 Battery Safety 18
1.3.4 Smart Meter Safety 21
1.4 Safety Symbols and Certification Marks 21
1.5 EU Declaration of Conformity 23
1.5.1 Equipment with Wireless Communication Modules 23
1.5.2 Equipment without Wireless Communication Modules (Except Battery) 24
1.5.3 Battery 24
2 System Introduction 26
2.1 System Overview 26
2.1.1 General Scenario 29
2.1.2 Microgrid Scenario 35
2.1.3 Coupling Scenario 40
2.2 Product Overview 46
2.2.1 Residential Energy Storage All-in-One (Three-Phase) 46
2.2.2 STS Appearance Description 53

2.2.3 Smart Meter 56
2.2.4 Smart Dongle 56
2.3 Supported Grid Types 57
2.4 System Working Mode 58
2.5 Features 68
3 Check and Storage 73
3.1 Check Before Receiving 73
3.2 deliverables 73
3.2.1 Inverter Deliverables 73
3.2.2 Batteries Deliverables (Lynx D G2) 78
3.2.2.1 Cluster Expansion Base Deliverables 78
3.2.2.2 Battery Bracket Deliverables 80
3.2.2.3 Wall Spacer Bracket Deliverables 80
3.2.3 STS Deliverables 81
3.2.4 Smart Meter Deliverables GM330&GMK330 85
3.2.4.1 Accessory List 85
3.3 Storage 86
4 Installation 89
4.1 Installation Requirements 89
4.1.1 Installation Environment Requirements 89
4.1.2 Installation Space Requirements 91
4.1.3 Tool Requirements 93

4.2 Equipment Handling 95
4.3 Installing the Equipment 96
4.4 Installing the STS 101
4.5 Installing the Smart Meter 102
5 System Wirings 104
5.1 System Wiring Electrical Block Diagram 105
5.2 Preparations Before STS Wiring 114
5.3 Detailed System Wiring Diagram 115
5.3.1 General Scenario 120
5.3.2 Microgrid Scenario 129
5.3.3 Coupling Scenario 133
5.4 Preparing Materials 137
5.4.1 Preparing Breakers 138
5.4.2 Preparing Cables 141
5.5 Connecting the PE cable 146
5.6 Connecting the PV Cable 147
5.7 Connecting the Battery Cable 149
5.8 Connecting the AC Cable 152
5.8.1 Connecting the Inverter AC Cable 153
5.8.2 Connecting the STS Power Cable 155
5.9 Connecting the Meter Cable 157
5.10 Connecting the Communication Cable 159

5.10.1 Connecting the Inverter Communication Cable 159
5.10.2 Connecting the STS Communication Cable 163
5.11 Installing the STS Cover Plate 164
6 System Commissioning 166
6.1 Check Before Power ON 166
6.2 Power ON 166
6.3 Installing the Protective Cover 173
6.4 Indicators 173
6.4.1 Inverter Indicators 173
6.4.2 Battery Indicators 176
6.4.3 STS Indicators 177
6.4.4 Smart Meter Indicators GM330&GMK330 177
6.4.4.1 Indicator Description 177
6.4.5 Smart Dongle Indicator 178
7 System Commissioning and Plant Monitoring 181
7.1 Device Commissioning and Plant Monitoring via SEMS+ App 181
7.2 Device Commissioning and Plant Monitoring via SEMS+ Web 182
8 Maintenance 184
8.1 Power OFF the System 184
8.2 Removing the Equipment 190
8.3 Disposing of the Equipment 191
8.4 Routine Maintenance 191

8.5 fault 194
8.5.1 Viewing Fault/Alarms Information 194
8.5.2 Fault Information and Troubleshooting 195
8.5.2.1 Inverter Fault 197
8.5.2.1.1 Troubleshooting (Fault Codes F01-F40) 197
8.5.2.1.2 Troubleshooting (Fault Codes F41-F80) 209
8.5.2.1.3 Troubleshooting (Fault Codes F81-F121) 218
8.5.2.1.4 Troubleshooting (Fault Codes F122-F163) 227
8.5.2.1.5 Fault Symptom Handling 238
8.5.2.2 Battery Fault 257
9 technical parameter 279
9.1 Inverter Parameters 279
9.2 Battery Technical Data 332
9.3 STS Technical Data 336
9.4 Smart Meter Technical Data 340
9.4.1 GM330 340
9.4.2 GMK330 341
9.5 Smart Dongle Technical Data 343
9.5.1 WiFi/LAN Kit-20 343
9.5.2 4G Kit-G20 344
10 Appendix 346
10.1 FAQ 346

10.1.1 How to conduct auxiliary detection for smart meters/CT? 346
10.1.2 How to Upgrade the Device Version 346
10.2 Explanation of Terms 347
10.3 Meaning of Battery SN Code 348
11 Contact Information 350

1 Safety Precautions

The safety precautions information contained in this document must always be followed when operating the device.

⚠WARNING
The device has been strictly designed and tested in accordance with safety regulations, but as an electrical device, before performing any operations on the device, relevant safety instructions must be followed. Improper operation may lead to serious injury or property damage.

1.1 General Safety

NOTICE

- Due to product version upgrades or other reasons, the document content will be updated from time to time. Unless otherwise agreed, the document content cannot replace the safety precautions on the product label. All descriptions in the document are for guidance only.
- Before installing the equipment, please read this document carefully to understand the product and safety precautions.
- All operations on the equipment must be performed by professional and qualified electrical technicians who are familiar with the relevant standards and safety regulations at the project location.
- When operating the equipment, use insulated tools and wear personal protective equipment to ensure personal safety. When touching electronic components, wear anti-static gloves, anti-static wrist straps, anti-static clothing, etc., to protect the equipment from electrostatic damage.
- Unauthorized disassembly or modification may cause equipment damage, which is not covered by the warranty.
- Equipment damage or personal injury caused by failure to install, use, or configure the equipment in accordance with this document or the corresponding user manual is beyond the manufacturer's liability.
- For more product warranty information, please visit the official website: https://en.goodwe.com/warrantyrelated.html.

1.2 personnel requirements

NOTICE

To ensure safety, compliance, and efficiency throughout the entire process of equipment transportation, Installation, wiring, operation, and maintenance, operations must be performed by qualified personnel.

1. Qualified personnel include:
   - Personnel who have mastered knowledge of equipment working principles, system structure, risks and hazards, and have received professional operation training or possess extensive practical experience.
   - Personnel who have received relevant technical and safety training, possess certain operational experience, are aware of potential dangers specific tasks may pose to themselves, and can take protective measures to minimize risks to themselves and others.
   - Qualified electrical technicians meeting the regulatory requirements of the country/region.
   - Personnel holding a degree in electrical engineering/an advanced diploma in electrical discipline or equivalent/possessing professional qualifications in the electrical field, with at least 2/3/4 years of experience in testing and supervision work using electrical equipment safety standards.
2. Personnel involved in special tasks such as electrical work, work at heights, and special equipment operation must hold valid qualification certificates as required by the equipment's location.
3. Medium-voltage equipment operation must be performed by certified high-voltage electricians.
4. Equipment and component replacement is only permitted to be performed by authorized personnel.

1.3 System Safety

⚠DANGER

- Before making electrical connections, disconnect all upstream switches of the equipment to ensure that the equipment is completely de-energized. Operation with the equipment energized is strictly prohibited, as it may result in electric shock or other hazards.

- For equipment that supports PV string connection, the PV input terminals have weak surge current resistance. It is strictly prohibited to use a DC voltage source to power up directly through the PV port. If powering up from the PV port is required, follow the steps below. If the equipment is damaged due to improper operation, it is considered man-made damage and is not covered by the product warranty.
  1. First, limit the output current of the DC voltage source to within the maximum allowable input current range of the PV port.
  2. Then close the DC switch of the inverter.
  3. Finally, slowly raise the output voltage of the DC source from zero to the target value at a rate of ≤50V/s.
- To prevent personal injury or equipment damage caused by energized operation, a circuit breaker must be added on the voltage input side of the equipment.
- All operations such as transportation, storage, installation, operation, use, and maintenance must comply with applicable laws, regulations, standards, and specifications.
- The specifications of cables and components used for electrical connections shall comply with local laws, regulations, standards, and specifications.
- Please use the cable connectors provided with the equipment to connect the equipment cables. If other types of connectors are used, any equipment damage caused thereby shall not be the responsibility of the equipment manufacturer.
- Ensure that all cable connections of the equipment are correct, tight, and free of looseness. Improper wiring may result in poor contact or damage to the equipment.
- The protective earth conductor of the equipment must be securely connected.
- To protect the equipment and its components from damage during transportation, ensure that transport personnel are professionally trained. Record the operating steps during transportation and keep the equipment balanced to avoid dropping the equipment.
- The equipment is heavy. Assign personnel according to the equipment weight to prevent the equipment from exceeding the weight that personnel can carry, which may cause crushing injuries.
- Ensure that the equipment is placed stably and not tilted. Tipping of the equipment may cause equipment damage and personal injury.

⚠WARNING

- During equipment installation, avoid subjecting the wiring terminals to load-bearing stress, as this may damage the terminals.
- Avoid excessive tension on the cables, as this may lead to poor connections. Reserve an appropriate cable length during wiring to avoid keeping the cables taut.
- Properly secure and support cables to avoid prolonged stress on terminals or connectors caused by the cable's own weight, pulling force, bending force, torque, or other external mechanical stress.
- Ensure that the protective earth conductor is reliably connected and reserve an appropriate margin. In the event of accidental external mechanical stress such as tension, ensure that the protective earth conductor does not disconnect before other conductors.
- Cables of the same type should be bundled together. Cables of different types should be laid with a separation of at least 30mm, and mutual winding or crossing is prohibited.
- Use of cables in high-temperature environments may cause the insulation layer to age or be damaged. The distance between cables and heat-generating components or the periphery of heat source areas shall be at least 30mm.

1.3.1 PV String Safety

⚠WARNING

- Ensure the component frame and mounting system are properly grounded.
- After connecting the DC cables, ensure the cable connections are tight and secure with no looseness. Improper wiring may cause poor contact or high impedance, and damage the inverter.
- Use a multimeter to measure the positive and negative poles of the DC cables to ensure correct polarity, with no reverse connection; and that the voltage is within the permissible range.
- Use a multimeter to measure the DC cables to ensure correct polarity, with no reverse connection; the voltage should be lower than the maximum DC input voltage. Damage caused by reverse connection and overvoltage is not covered by the equipment manufacturer's warranty.
- The PV string output does not support grounding. Before connecting the PV string to the inverter, ensure the minimum insulation resistance to ground of the PV string meets the minimum insulation resistance requirement (R=Max. Input Voltage (V)/30mA).
- Do not connect the same PV string to multiple inverters, as this may damage the inverters.
- The PV modules used with the inverter must comply with IEC 61730 Class A standards.
- When the PV string input voltage or input current is high, it may cause the inverter output power to derate.

1.3.2 Inverter Safety

⚠WARNING

- Ensure that the voltage and frequency at the grid connection point comply with the inverter grid connection specifications.
- It is recommended to install protective devices such as circuit breakers or fuses on the AC side of the inverter. The protective device rating must be greater than 1.25 times the inverter's maximum AC output current.
- If the inverter triggers arc fault alarms less than 5 times within 24 hours, the alarm can be cleared automatically. After the 5th arc fault alarm, the inverter will shut down for protection. The inverter can only resume normal operation after the fault is cleared.
- If no battery is configured in the photovoltaic system, the BACK-UP function is not recommended, as it may cause a risk of system power interruption.
- When grid voltage and frequency fluctuate, the inverter output power may be derated.

1.3.3 Battery Safety

⚠DANGER

- Before operating any devices in the system, ensure that the devices are powered off to avoid the risk of electric shock. During device operation, strictly adhere to all safety precautions in this manual and the safety labels on the devices.
- Do not disassemble, modify, or repair the battery without official authorization from the device manufacturer. Otherwise, it may cause electric shock or device damage, and any losses incurred are beyond the manufacturer’s liability.
- Do not impact, pull, drag, squeeze, or step on the device, and do not place the battery in fire, as the battery may explode.
- Do not place the battery in high-temperature environments. Ensure there are no heat sources near the battery and that it is not exposed to direct sunlight. If the ambient temperature exceeds 60°C, it may cause a fire.
- Do not use the battery if it has obvious defects, cracks, damage, or other conditions. Battery damage may lead to electrolyte leakage.
- Do not move the battery system while it is operating. If battery replacement or addition is needed, contact the after-sales service center.
- Battery short circuits may cause personal injury. The instantaneous high current from a short circuit can release a large amount of energy, which may lead to a fire.
- To protect the battery pack and its components from damage during transportation, ensure that transport personnel are professionally trained. Record the operating steps during transportation and keep the device balanced to avoid dropping.
- The battery device is heavy. Assign personnel according to the device's weight to prevent it from exceeding the weight range that can be manually handled, which could cause injury to personnel.

⚠WARNING

- Battery current may be affected by factors such as temperature, Humidity, weather conditions, etc., which may cause current limiting and affect load capacity.
- If the battery cannot start, contact the after-sales service center as soon as possible. Otherwise, the battery may be permanently damaged.
- Regularly inspect and maintain the battery according to its maintenance requirements.
- Ensure that the battery system is not damaged during transportation and storage. Ensure that the device is placed stably and not tilted, as tipping may cause device damage and personal injury.

Emergency Response Measures

- Battery electrolyte leakage
  If a battery module leaks electrolyte, avoid contact with the leaking liquid or gas. Electrolyte is corrosive and contact may cause skin irritation and chemical burns. If accidental contact with the leaked substance occurs, take the following actions:
  - inhalation: Evacuate from the contaminated area and seek medical help immediately.
  - Eye contact: Rinse with clean water for at least 15 minutes and seek medical help immediately.
  - Skin contact: Wash the affected area thoroughly with soap and water and seek medical help immediately.
  - Ingestion: Induce vomiting and seek medical assistance immediately.
- Fire
  - When the battery temperature exceeds 150°C, there is a risk of fire. A battery fire may release toxic and harmful gases.
  - To prevent fire, ensure carbon dioxide or water fire extinguishing equipment is available near the device.
  - When extinguishing a fire, do not use ABC dry powder fire extinguishers. Firefighters must wear protective clothing and self-contained breathing apparatus.
- Battery triggers fire protection
  For batteries equipped with optional fire protection functionality, after the fire protection function is triggered, perform the following actions:
  - Immediately cut off the main power switch to ensure no current flows through the battery system.

- Conduct a preliminary visual inspection of the battery for any damage, deformation, leakage, or unusual odor. Check the battery casing, connectors, and cables.
- Use a temperature sensor to detect the battery and its ambient temperature to ensure there is no risk of overheating.
- Isolate and label the damaged battery, and dispose of it properly according to local regulations.

1.3.4 Smart Meter Safety

⚠WARNING
If the grid voltage fluctuation exceeds 265V, long-term overvoltage operation may cause damage to the meter. It is recommended to add a fuse with a rated current of 0.5A on the voltage input side of the meter to protect it.

1.4 Safety Symbols and Certification Marks

⚠DANGER
• After equipment installation, the labels and warning signs on the enclosure must remain clearly visible. Do not cover, alter, or damage them. • The following enclosure warning label descriptions are for reference only. Refer to the actual labels on the equipment.

No.	Symbol	Meaning
1		There is potential danger when the equipment is running. Please take protective measures when operating the equipment.
2		High voltage danger. There is high voltage when the equipment is running. Before operating the equipment, ensure the equipment is powered off.

No.	Symbol	Meaning
3		The surface of the inverter is hot. Do not touch while the equipment is running, otherwise burns may occur.
4		Use the equipment properly. In extreme conditions, there is a risk of explosion.
5		The battery contains flammable materials. Beware of fire.
6		The equipment contains corrosive electrolyte. Avoid contact with leaked electrolyte or volatile gases.
7		Delayed discharge. After the equipment is powered off, wait 5 minutes until the equipment is fully discharged.
8		The equipment should be kept away from open flames or ignition sources.
9		The equipment should be kept away from areas accessible to children.
10		Do not extinguish with water.
11		After wiring the battery system or while the battery system is in operation, do not lift the equipment.
12		Disassemble is forbidden

No.	Symbol	Meaning
13		Before operating the equipment, please read the product manual carefully.
14		Do not disconnect or plug/unplug DC terminals directly while the equipment is working.
15		Wear personal protective equipment during installation, operation, and maintenance.
16		The equipment must not be disposed of as household waste. Dispose of the equipment in accordance with local laws and regulations, or return it to the manufacturer.
17		Grounding point.
18		Recycling symbol.
19		CE certification mark.
20		TUV mark.
21		RCM mark.

1.5 EU Declaration of Conformity

1.5.1 Equipment with Wireless Communication Modules

Equipment with wireless communication modules sold in the European market must comply with the following directives:

- Radio Equipment Directive 2014/53/EU (RED)
- Restrictions of Hazardous Substances Directive 2011/65/EU and (EU) 2015/863 (RoHS)
- Waste Electrical and Electronic Equipment 2012/19/EU
- Registration, Evaluation, Authorization and Restriction of Chemicals (EC) No 1907/2006 (REACH)

1.5.2 Equipment without Wireless Communication Modules (Except Battery)

Equipment without wireless communication modules that can be sold in the European market meets the requirements of the following directives:

- Electromagnetic compatibility Directive 2014/30/EU (EMC)
- Electrical Apparatus Low Voltage Directive 2014/35/EU (LVD)
- Restrictions of Hazardous Substances Directive 2011/65/EU and (EU) 2015/863 (RoHS)
- Waste Electrical and Electronic Equipment 2012/19/EU
- Registration, Evaluation, Authorization and Restriction of Chemicals (EC) No 1907/2006 (REACH)

1.5.3 Battery

The Battery sold in the European market complies with the following directives:

- Electromagnetic compatibility Directive 2014/30/EU (EMC)
- Electrical Apparatus Low Voltage Directive 2014/35/EU (LVD)
- Restrictions of Hazardous Substances Directive 2011/65/EU and (EU) 2015/863 (RoHS)[*1]
- Regulation (EU) 2023/1542 Article 12 - Safety of stationary battery energy storage systems
- Regulation (EU) 2023/1542 Article 10 - Performance and durability requirements for rechargeable industrial batteries, LMT batteries and electric vehicle batteries

- Regulation (EU) 2023/1542 Article 14 - Information on the state of health and expected lifetime of batteries
- Waste Electrical and Electronic Equipment 2012/19/EU
- Registration, Evaluation, Authorization and Restriction of Chemicals (EC) No 1907/2006 (REACH)
  Our Battery products comply with the hazardous substance restriction requirements stipulated by this act.

More EUDeclaration of Conformity can be obtained fromOfficial WebsiteAcquisition.

2 System Introduction

2.1 System Overview

⚠WARNING

- The energy storage system is not suitable for connection to devices that rely on a stable power supply, such as life-sustaining medical equipment. Ensure that when the system is powered off, no personal injury can occur.
- If the residential storage integrated machine is in a high-temperature state or under BMS current limiting, the battery charging power may be limited, which may cause the system voltage to be too high and trigger overvoltage protection.
- The inverter only supports GoodWe brand batteries specified in this manual. If no battery is connected, it can only operate in grid-tied mode, and must be installed on the base provided in the package.
- In microgrid scenarios, the PV open-circuit voltage of the residential storage integrated machine is recommended to be < 0.85*PV maximum input voltage to avoid overvoltage protection triggered by excessive system voltage under harsh operating conditions.
- In microgrid scenarios, ensure that the over-frequency derating point of the grid-tied inverter is consistent with that of the residential storage integrated machine.
- In systems where the inverter operates completely off-grid, if the battery is exposed to prolonged low sunlight or rainy weather without timely recharging, over-discharge may occur, causing battery performance degradation or damage. To ensure long-term stable system operation, the battery should be prevented from being completely drained. Recommended measures are as follows:
  - When operating off-grid, set a minimum SOC protection threshold. It is recommended to set the off-grid battery SOC lower limit to 30%.
  - When the SOC approaches the protection threshold, the system will automatically enter load-limiting or protection mode.
  - If sunlight is insufficient for several consecutive days and the battery SOC is too low, the battery should be recharged in a timely manner through external energy sources (such as a generator or grid-assisted charging).

⚠WARNING

- Regularly check the battery status to ensure it operates within a safe working range.
- It is recommended to fully charge and discharge the battery once every six months to calibrate SOC accuracy.

- Connect the inverter to the APP and complete the corresponding battery parameter settings.
- Due to product version upgrades or other reasons, the document content may be updated from time to time. For the matching relationship between inverters and IoT products, please refer to: https://en.goodwe.com/Ftp/EN/Downloads/User%20Manual/GW_Compatibility-list-of-GoodWe-inverters-and-IoT-products-EN.pdf
- For detailed networking and wiring solutions for each scenario, please refer to: 5.3.Detailed System Wiring Diagram(Page 115).

NOTICE

- Whole-home backup power scenario: When the power grid is interrupted, the energy storage system can seamlessly take over all loads, ensuring continuous and stable power supply to the entire home and keeping all electrical equipment unaffected by grid fluctuations.
- In the whole-home backup power scenario, there is no need to connect an additional electricity meter or CT. Simply set “Meter Type” to “Built-in CT, no external meter or CT” in the App to enable the anti-reverse flow function.

When the energy storage system is in an off-grid state, the following loads can be powered normally:

BACK-UP Port Off-grid Load Capacity Description				
Inverter Model	GW5K-ETA-G20 GW6K-ETA-G20 GW8K-ETA-G20 GW9.999K-ETA-G20 GW10K-ETA-G20 GW12K-ETA-G20 GW15K-ETA-G20 GW20K-ETA-G20 GW5K-BTA-G20 GW6K-BTA-G20 GW8K-BTA-G20 GW9.999K-BTA-G20 GW10K-BTA-G20 GW12K-BTA-G20 GW15K-BTA-G20 GW20K-BTA-G20		GW25K-ETA-G20 GW29.999K-ETA-G20 GW30K-ETA-G20 GW25K-BTA-G20 GW29.999K-BTA-G20 GW30K-BTA-G20	
Load Type	Single-phase	Three-phase	Single-phase	Three-phase
Rated power of a single inductive load (kVA)	1.1	3.3	2.2	6.6
Total rated power of multiple inductive loads (kVA)	0.4*Pn/3	0.4*Pn	0.4*Pn/3	0.4*Pn
Capacitive load (kVA)	0.33*Pn/3	0.33*Pn	0.33*Pn/3	0.33*Pn
Half-wave load (kW)	2	-	3	-

BACK-UP Port Off-grid Load Capacity Description
Note: • Pn: Rated output power of the inverter. • Half-wave load: Some old or non-EMC-compliant household appliances (such as hairdryers and small heaters using half-wave rectification). • If the total power of multiple inductive loads calculated based on rated power is less than the rated power of a single inductive load, the total rated power of multiple inductive loads shall be equal to the rated power of a single inductive load. • If inductive loads are required, it is recommended to use a frequency converter. • For parallel operation of 2 or more units, the allowable total rated power of inductive loads = rated power of a single inductive load × number of parallel units × 80%.

NOTICE
If you need to use the Static Transfer Switch (STS), please ensure the following: 1. When the SMART-PORT port is connected to non-critical loads, the maximum total load capacity for the SMART-PORT and BACK-UP ports is as follows: • GW30K-STS-G10≤30kVA • GW60K-STS-G10≤60kVA To ensure that the loads connected to the BACK-UP port continue to receive power during a grid outage, it is recommended that the total power of SMART-PORT port + BACK-UP Loads does not exceed the rated output power of the energy storage system.

2.1.1 General Scenarios

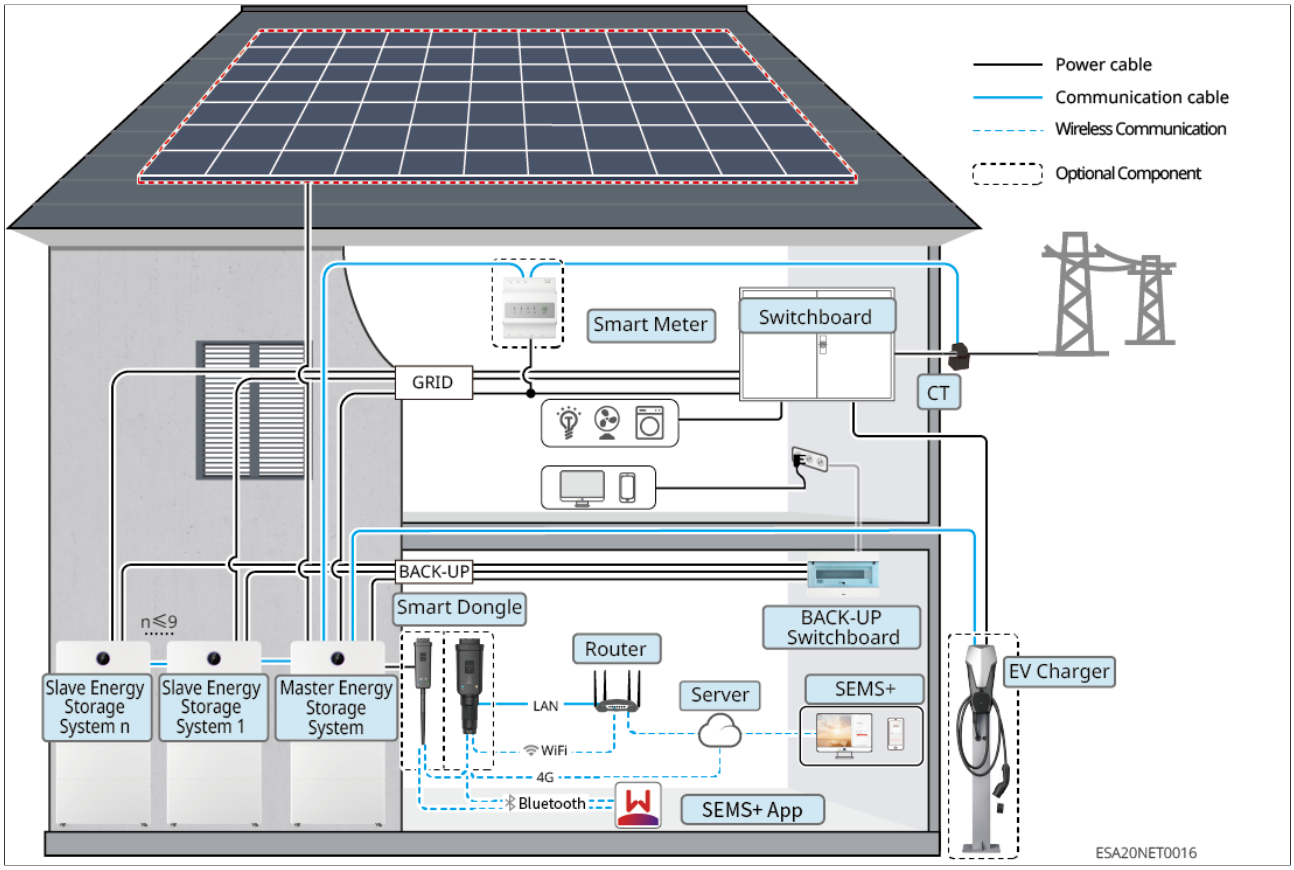

Figure1 General Scenario 1

Equipped with Static Transfer Switch (STS)

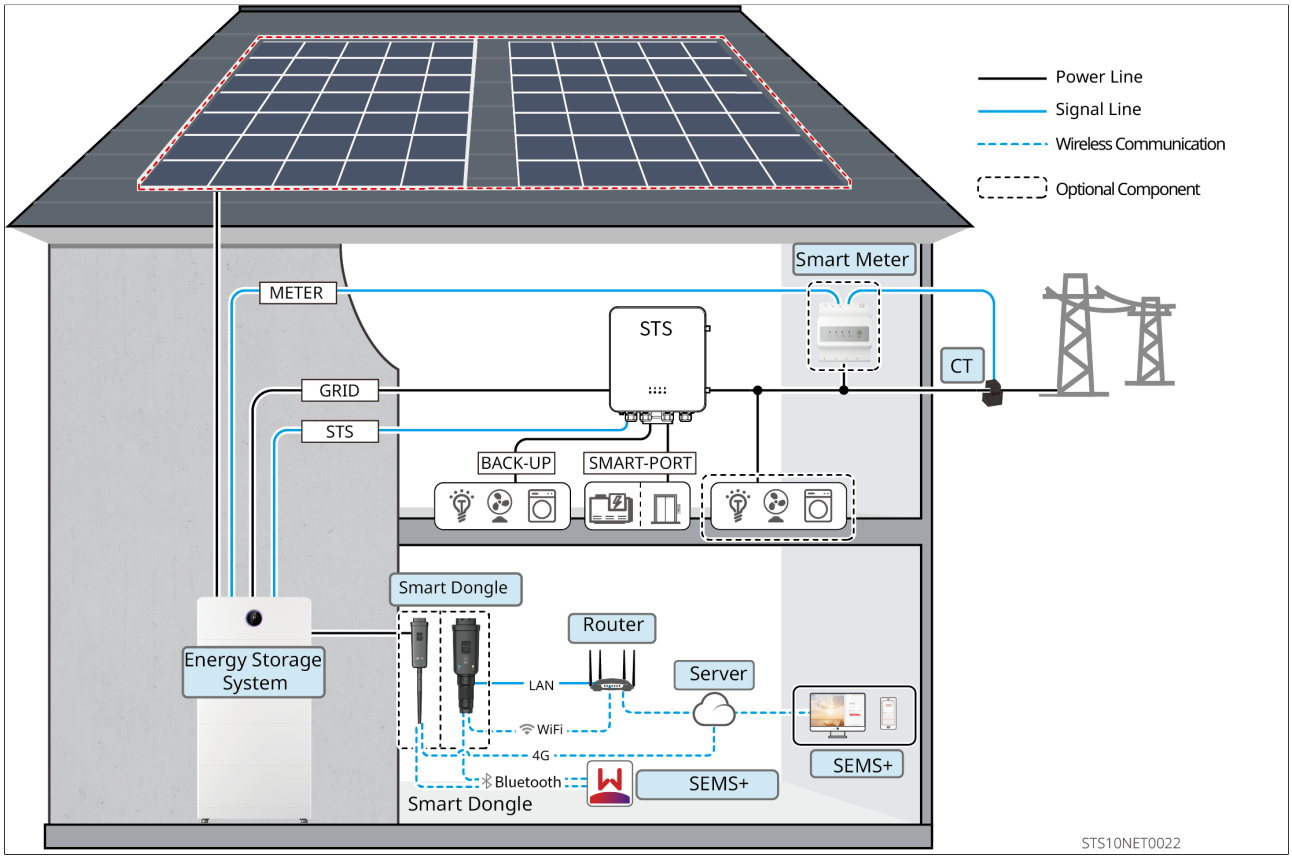

Figure2 General Scenario 2: With STS

Device Type	model	Description
hybrid inverter	GW5K-ETA-G20 GW6K-ETA-G20 GW8K-ETA-G20 GW9.999K-ETA-G20 GW10K-ETA-G20 GW12K-ETA-G20 GW15K-ETA-G20 GW20K-ETA-G20 GW25K-ETA-G20 GW29.999K-ETA-G20 GW30K-ETA-G20 GW5K-BTA-G20 GW6K-BTA-G20 GW8K-BTA-G20 GW9.999K-BTA-G20 GW10K-BTA-G20 GW12K-BTA-G20 GW15K-BTA-G20 GW20K-BTA-G20 GW25K-BTA-G20 GW29.999K-BTA-G20 GW30K-BTA-G20	• Only in single-inverter scenarios can GoodWe AC charging piles be connected. • The system supports up to 10 Inverters forming a parallel system, and supports mixed parallel connection of Inverters with different power ratings in both grid-tied and off-grid modes. When mixed, it is recommended to use a high-power Inverter as the master. Microgrid function is not supported in parallel mode. If more than 6 Inverters are paralleled, contact the after-sales service center. • Supports generator control and battery charging from the generator. If you need to connect a generator, use the GMK330 or GM330 Smart Meter. • In a parallel system, each Inverter must have a WiFi/LAN Kit-20 installed. • The following version requirements must be met during system networking: ◦ Inverter ARM software version V04.182 or later. ◦ Inverter DSP software version V02.2013 or later. ◦ In a parallel system, the DSP and ARM software versions must be matched, and the software versions of the master and slave Inverters must be consistent.

Device Type	model	Description
Battery system	GW5.1-BAT-D-G20 GW5.1-BAT-D-G21 GW8.3-BAT-D-G20 GW8.3-BAT-D-G21 GW6.0-BAT-D-G20 GW9.0-BAT-D-G20	• Battery modules of different models can be mixed. • The system supports 5-108kWh to meet different power and energy matching requirements. • The battery heating film is optional. The "Battery Heating" function can be enabled only on models configured with the heating film. Do not use batteries without a heating film at low temperatures; otherwise, the equipment may fail to operate. • The battery heating function is unavailable when GW5.1-BAT-D-G20, GW8.3-BAT-D-G20, GW6.0-BAT-D-G20, GW9.0-BAT-D-G20 and GW5.1-BAT-D-G21, GW8.3-BAT-D-G21 are mixed. • If the system requires battery mixing and split-type capacity expansion, ensure that the BMS software version is V06 or later and the DCDC version is V06 or later.
Static Transfer Switch Cabinet (STS)	GW30K-STS-G10 GW60K-STS-G10	• Optional. If needed, contact GoodWe to purchase. • Supports connection of 1 hybrid inverter, diesel generator, load, and grid.
Smart Meter	Inverter built-in meter	
	GMK330 (purchased from GoodWe)	

Device Type	model	Description
	GM330 (purchased from GoodWe)	• Built-in meter: use the CT provided with the inverter. ◦ CT ratio: 120A:40mA. ◦ If the built-in meter of the Inverter does not meet usage requirements, contact a dealer to purchase a GMK330 or GM330 Smart Meter. • GMK330: CT is not replaceable; CT ratio: 120A:40mA. • GM330: The CT can be purchased from GoodWe or purchased separately. CT ratio requirement: nA/5A. ◦ nA: CT primary input current; n ranges from 200 to 5000. ◦ 5A: CT secondary output current. • If more than 2 Inverters are paralleled, or the wire diameter or measuring range of the standard CT does not meet the total current requirements of the on-site parallel system, use the GM330 Smart Meter.
Smart Dongle	WiFi/LAN Kit-20	• Applicable to single-Inverter networking and parallel-Inverter networking scenarios. • Bluetooth enables local configuration of device parameters and viewing of device operating information. WiFi or LAN uploads system operating information to the monitoring platform. • Please ensure that the firmware version of the Smart Dongle is V07 or later.

Device Type	model	Description
	4G Kit-G20	• Applicable to single-Inverter networking scenarios. • Bluetooth enables local configuration of device parameters and viewing of device operating information. 4G uploads system operating information to the monitoring platform.

2.1.2 Microgrid Scenario

When the on-grid inverter is connected to the BACK-UP port of the energy storage inverter, it is a microgrid scenario.

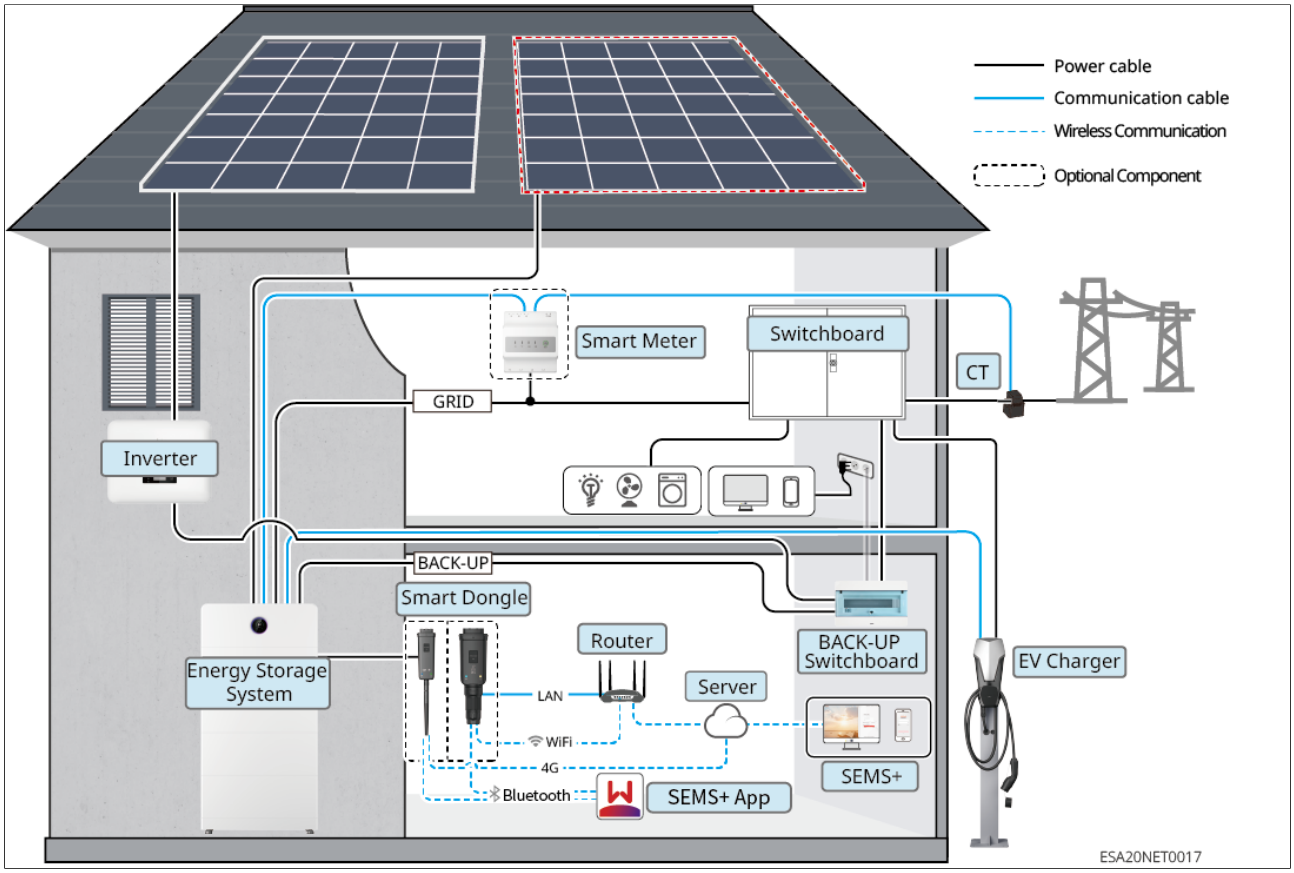

Figure3 Microgrid Scenario 1

with Static Transfer Switch Cabinet (STS)

When the grid-connected inverter is connected to the SMART-PORT of the static transfer switch cabinet (STS), it is a Microgrid Scenario.

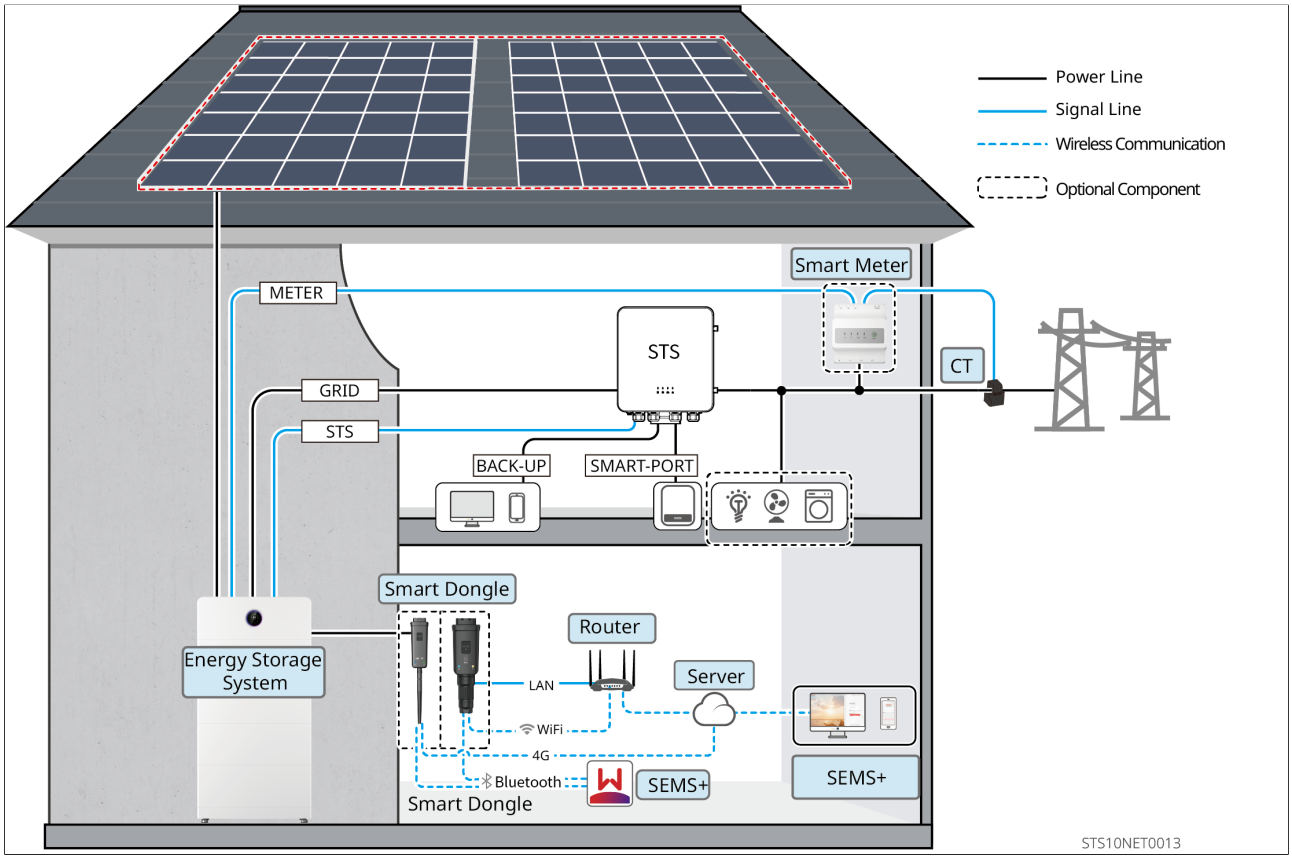

Figure4 Microgrid Scenario 2: with STS

Equipment Type	model	Description
energy storage inverter	GW5K-ETA-G20 GW6K-ETA-G20 GW8K-ETA-G20 GW9.999K-ETA-G20 GW10K-ETA-G20 GW12K-ETA-G20 GW15K-ETA-G20 GW20K-ETA-G20 GW25K-ETA-G20 GW29.999K-ETA-G20 GW30K-ETA-G20 GW5K-BTA-G20 GW6K-BTA-G20 GW8K-BTA-G20 GW9.999K-BTA-G20 GW10K-BTA-G20 GW12K-BTA-G20 GW15K-BTA-G20 GW20K-BTA-G20 GW25K-BTA-G20 GW29.999K-BTA-G20 GW30K-BTA-G20	• In the Microgrid Scenario, the system only supports the use of one energy storage inverter. • In the Microgrid Scenario, connecting generators is not supported. • During system networking, satisfy the following version requirements: ◦ Inverter ARM software version is 04.182 and above. ◦ Inverter DSP software version is 02.2013 or later.

Equipment Type	model	Description
battery system	GW5.1-BAT-D-G20 GW5.1-BAT-D-G21 GW8.3-BAT-D-G20 GW8.3-BAT-D-G21 GW6.0-BAT-D-G20 GW9.0-BAT-D-G20	• Battery modules of different models support mixed use. • System supports 5-108kWh to meet different power and energy matching requirements. • Battery heating film is optional; only models equipped with the heating film can enable the "Battery Heating" function. Batteries not equipped with the heating film should not be used in low-temperature environments, otherwise the equipment may fail to operate. • GW5.1-BAT-D-G20, GW8.3-BAT-D-G20, GW5.1-BAT-D-G21, GW8.3-BAT-D-G21, GW6.0-BAT-D-G20 , GW9.0-BAT-D-G20 Battery heating function is not available when used in combination. • If the system has battery mixing and split-type expansion requirements, ensure that the BMS software version is V06 or above and the DCDC version is V06 or above.
Static Transfer Switch Cabinet (STS)	GW30K-STS-G10 GW60K-STS-G10	• Optional. For usage, please contact Goodwe to purchase. • Supports connection of 1 energy storage inverter, diesel generator, load, and grid.
smart meter	Inverter built-in meter	
	GMK330 (purchased from GoodWe)	

Equipment Type	model	Description
	GM330 (purchased from Goodwe)	• Built-in meter: Please use the CT supplied with the inverter for connection. ◦ CT ratio: 120A:40mA ◦ When the built-in meter of the inverter does not meet the usage requirements, you can contact the dealer to purchase a GMK330 or GM330 smart meter. • GMK330: CT does not support replacement, CT ratio is 120A:40mA. • GM330: CT supports from GoodWe or self-purchase, CT ratio is nA:5A.
Smart Communication Stick	WiFi/LAN Kit-20	• Using Bluetooth signal for local configuration of device parameters and viewing device operation information, and uploading system operation information to the monitoring platform via WiFi or LAN. • Please ensure the firmware version of the smart communication stick is 07 or above.
	4G Kit-G20	• Using Bluetooth for local configuration of device parameters and viewing device operational information, and uploading system operation data to the monitoring platform via 4G.

Equipment Type	model	Description
grid-connected inverter	-	• Goodwe brand grid-tied inverters are recommended, and the use of third-party grid-tied inverters is supported. • In the Microgrid Scenario, please ensure that the rated output power of the grid-connected inverter ≤ the rated output power of the hybrid inverter. • When the microgrid system is in grid-connected state, if power limitation is required, please ensure: ◦ The energy storage inverter needs to be set in the grid power limit interface of the SEMS+ App. For the grid-tied inverter, please set it according to the actual tool used. ◦ To ensure that the grid-tied inverter can continuously generate power, it is necessary to adjust the output power of the hybrid inverter through the microgrid mode interface of the SEMS+ App. Note: Different grid-tied inverters have different output power control accuracy. Please set the grid-tied power limit parameter value according to the actual situation.

2.1.3 Coupling Scenarios

When a grid-connected inverter is connected to the GRID port of an energy storage inverter, this is a coupling scenario.

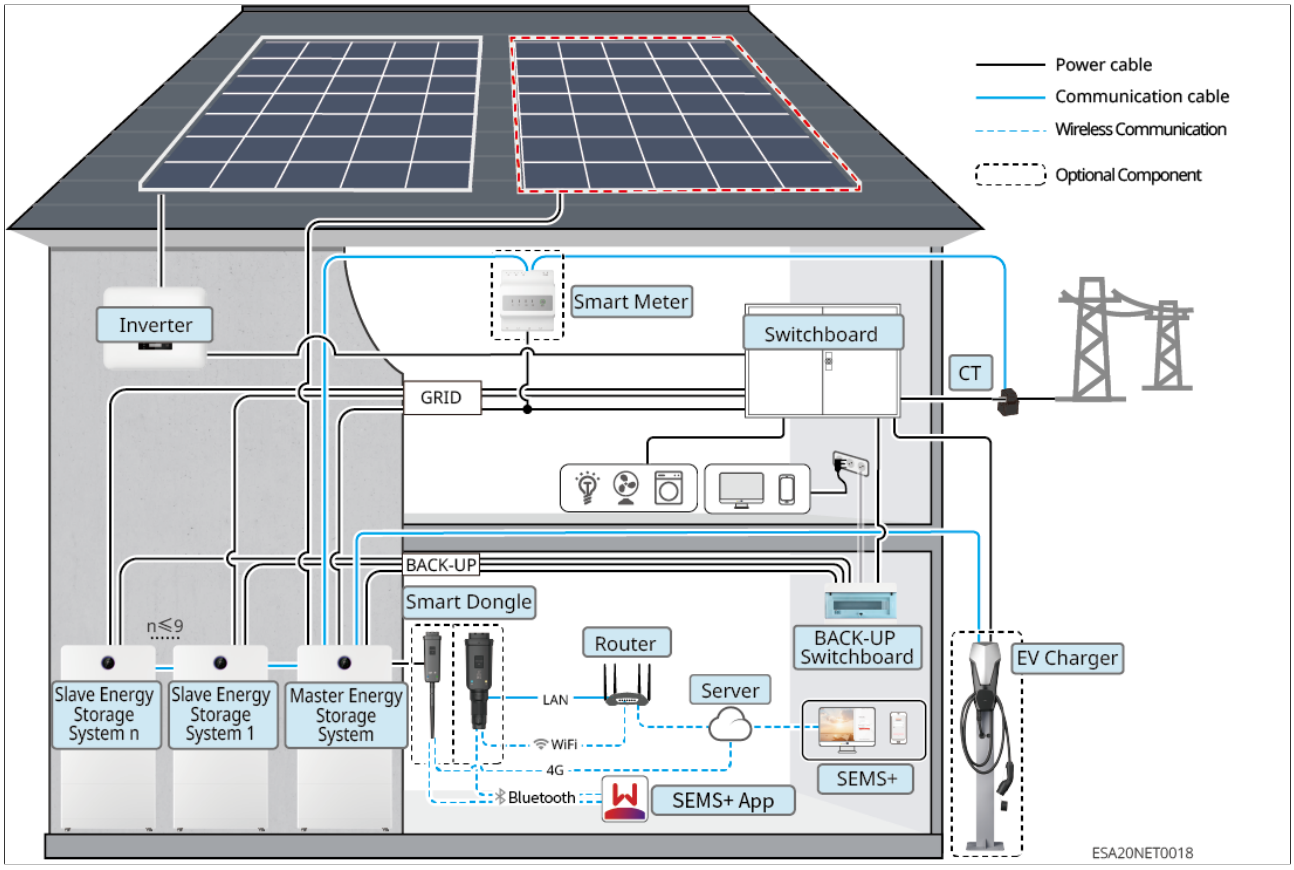

Figure5 Coupling scenario 1

Networking with static transfer switch cabinet (STS)

When a grid-connected inverter is connected to the GRID port of the static transfer switch cabinet (STS), this is a coupling scenario.

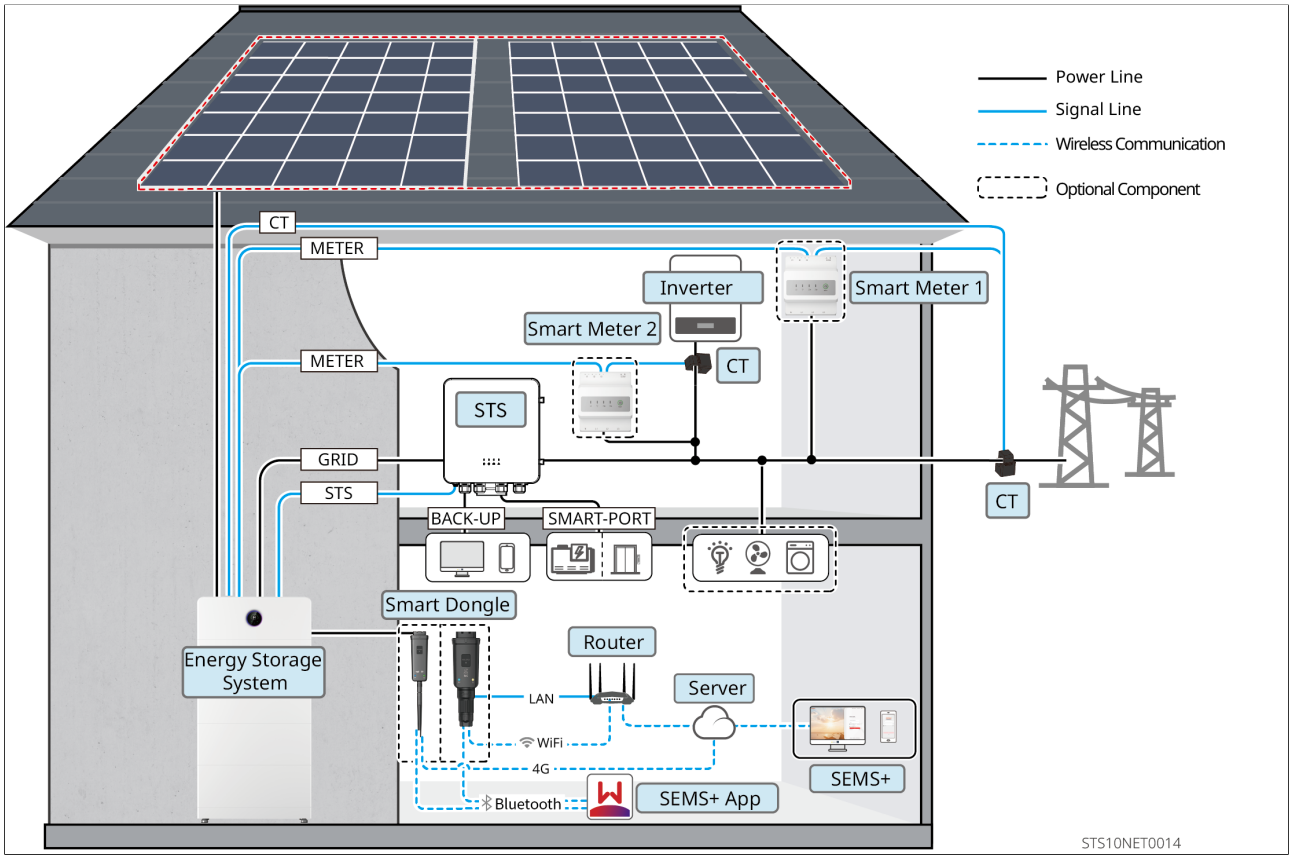

Figure6 Coupling scenario 2: With STS

Device Type	Model	Description
hybrid inverter	GW5K-ETA-G20 GW6K-ETA-G20 GW8K-ETA-G20 GW9.999K-ETA-G20 GW10K-ETA-G20 GW12K-ETA-G20 GW15K-ETA-G20 GW20K-ETA-G20 GW25K-ETA-G20 GW29.999K-ETA-G20 GW30K-ETA-G20 GW5K-BTA-G20 GW6K-BTA-G20 GW8K-BTA-G20 GW9.999K-BTA-G20 GW10K-BTA-G20 GW12K-BTA-G20 GW15K-BTA-G20 GW20K-BTA-G20 GW25K-BTA-G20 GW29.999K-BTA-G20 GW30K-BTA-G20	• Access to a GoodWe AC charging pile is supported in single-unit scenarios only. • The system supports a maximum of 10 inverters in a parallel system, and supports grid-tied/off-grid mixed parallel operation of inverters of different power ratings; when mixing, it is recommended to use a high-power inverter as the master. Microgrid function is not supported in parallel mode. If the number of parallel inverters exceeds 6, please contact the after-sales service center. • Supports generator control and battery charging from the generator. If a generator needs to be connected, use the GMK330 or GM330 Smart Meter. • In a parallel system, each inverter must be installed with a WiFi/LAN Kit-20. • The following version requirements must be met during system networking: ◦ Inverter ARM software version must be 04.182 or higher. ◦ Inverter DSP software version must be 02.2013 or higher. ◦ In a parallel system, the DSP and ARM software versions must be used together, and the software versions of the master and slave inverters must be consistent.

Device Type	Model	Description
Battery system	GW5.1-BAT-D-G20 GW5.1-BAT-D-G21 GW8.3-BAT-D-G20 GW8.3-BAT-D-G21 GW6.0-BAT-D-G20 GW9.0-BAT-D-G20	• Battery modules of different models can be mixed. • The system supports 5-108kWh, meeting different power and energy matching requirements. • The battery heating film is optional. Only models equipped with the heating film can enable the "Battery Heating" function. Do not use batteries without the heating film in low-temperature environments; otherwise, the equipment may fail to operate. • The battery heating function is unavailable when mixing GW5.1-BAT-D-G20, GW8.3-BAT-D-G20, GW5.1-BAT-D-G21, GW8.3-BAT-D-G21, GW6.0-BAT-D-G20, GW9.0-BAT-D-G20 . • If the system requires battery mixing and split-type expansion, ensure that the BMS software version is V06 or higher and the DCDC version is V06 or higher.
Static Transfer Switch Cabinet (STS)	GW30K-STS-G10 GW60K-STS-G10	• Optional. If needed, please contact GoodWe to purchase. • Supports connection to 1 hybrid inverter, diesel generator, load, and grid.
Smart Meter	Inverter built-in meter	
	GMK330 (purchased from GoodWe)	

Device Type	Model	Description
	GM330 (purchased from GoodWe)	• Built-in meter: Use the CT shipped with the unit to connect the inverter. ◦ CT ratio: 120A:40mA. ◦ When the inverter built-in meter is not adequate, contact a dealer or other source to purchase a GMK330 or GM330 Smart Meter. • GMK330: CT is not replaceable; CT ratio: 120A:40mA • GM330: CT can be purchased from GoodWe or purchased separately; CT ratio requirement: nA/5A ◦ nA: CT primary input current; n ranges from 200 to 5000 ◦ 5A: CT secondary output current • If the number of parallel inverters exceeds 2, or the wire gauge or range of the standard CT does not meet the total parallel current requirement on site, use the GM330 Smart Meter.
Smart Dongle	WiFi/LAN Kit-20	• Use Bluetooth signals for near-end configuration of device parameters and viewing of device operation information; upload system operation information to the monitoring platform via WiFi or LAN. • Ensure that the firmware version of the Smart Dongle is 07 or higher.
	4G Kit-G20	Use Bluetooth signals for near-end configuration of device parameters and viewing of device operation information; upload system operation information to the monitoring platform via 4G.

Device Type	Model	Description
grid-tied PV inverter	-	• GoodWe brand grid-tied PV inverters are recommended; third-party grid-tied PV inverters are supported. • In coupling scenarios, ensure that the rated output power of the grid-tied PV inverter is ≤ the rated output power of the hybrid inverter. • When the coupled system is in the grid-tied state and power limiting is required, ensure: The hybrid inverter must be configured through the grid-tied power limit interface of the SEMS+ App; the grid-tied PV inverter should be configured according to the actual tool used. Note: Different grid-tied PV inverters have different output power control accuracies. Set the grid-tied power limit parameter values based on actual conditions.

2.2 Product Overview

2.2.1 Residential Energy Storage All-in-One (Three-Phase)

All-in-one residential energy storage unit adopts a blind-mate stacking connection method and integrates inverter and battery cells through a modular design.
All-in-one Residential Storage System Appearance Description:

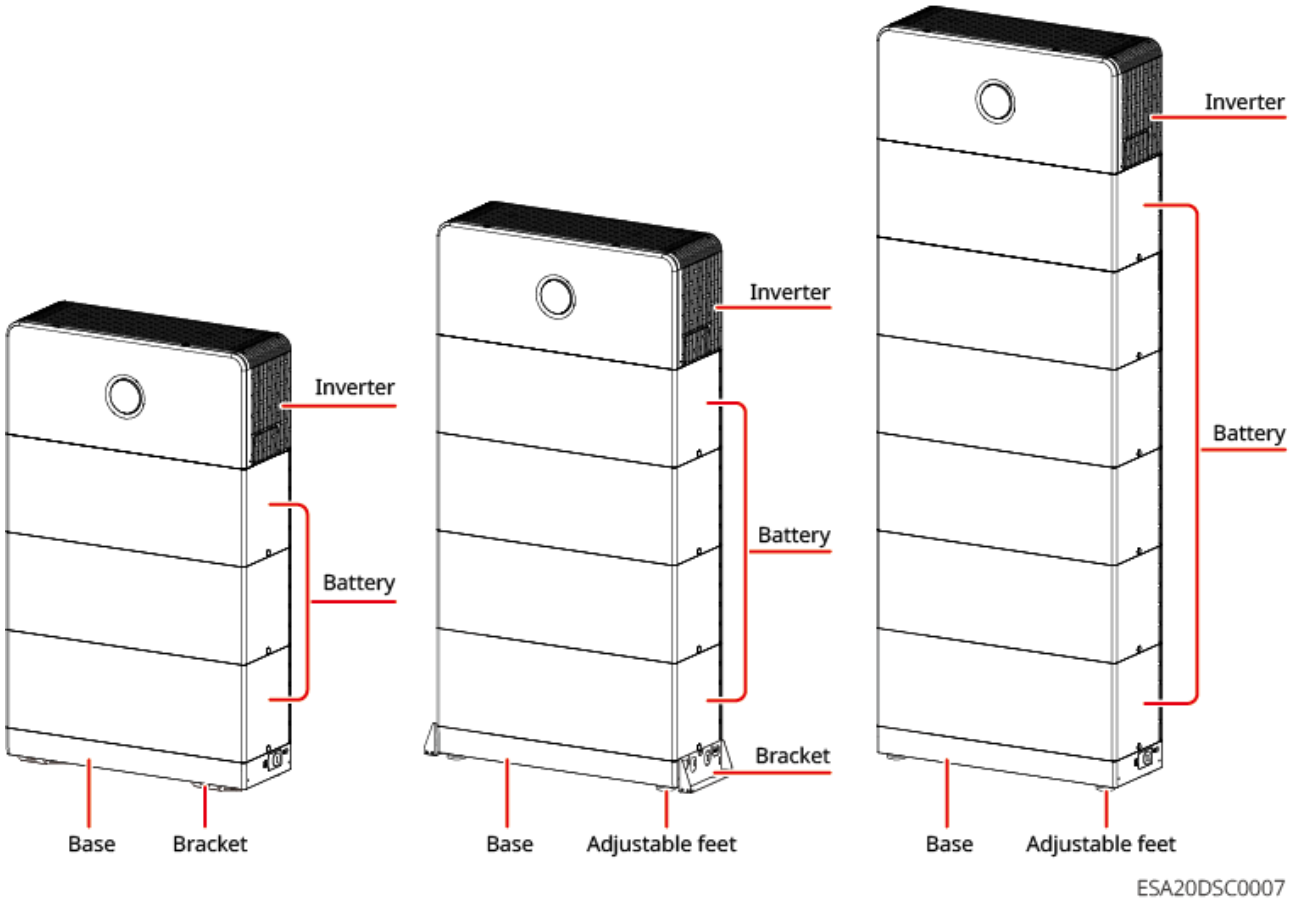

The system supports battery capacity expansion, and the total battery capacity is determined by the quantity and specifications of battery modules. Configuration must strictly adhere to the restrictions specified in this section. System over all configuration description:

A: GW5.1-BAT-D-G20, GW5.1-BAT-D-G21, GW6.0-BAT-D-G20

B: GW8.3-BAT-D-G20, GW8.3-BAT-D-G21, GW9.0-BAT-D-G20

Mounting Method	Number of Expansion Groups	single stack	Total number of batteries
ground-mounted installation	≤3 groups	Floor-Mounted Standoff Bracket ≤4 pieces Wall-mounted ≤6 units	≤12pcs
Wall-mounted Installation (A)	≤3 Groups	≤3pcs	≤9 units

Mounting Method	Number of Expansion Groups	single stack	Total number of batteries
挂墙Installation (A/B/A+B)	≤3 sets	≤2 pieces	≤6piece
Note: expansion groups × stacks per group ≤ total system battery count.			

Wall Mounting

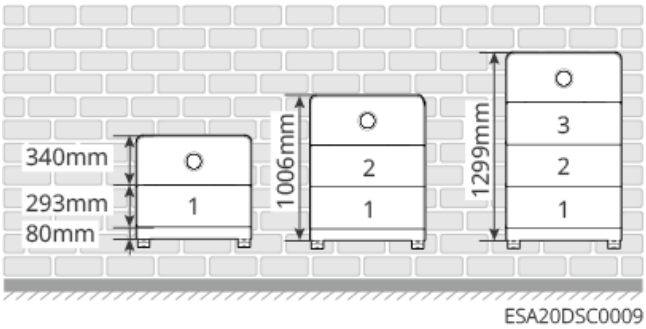

Floor Mounting

- wall-mounted

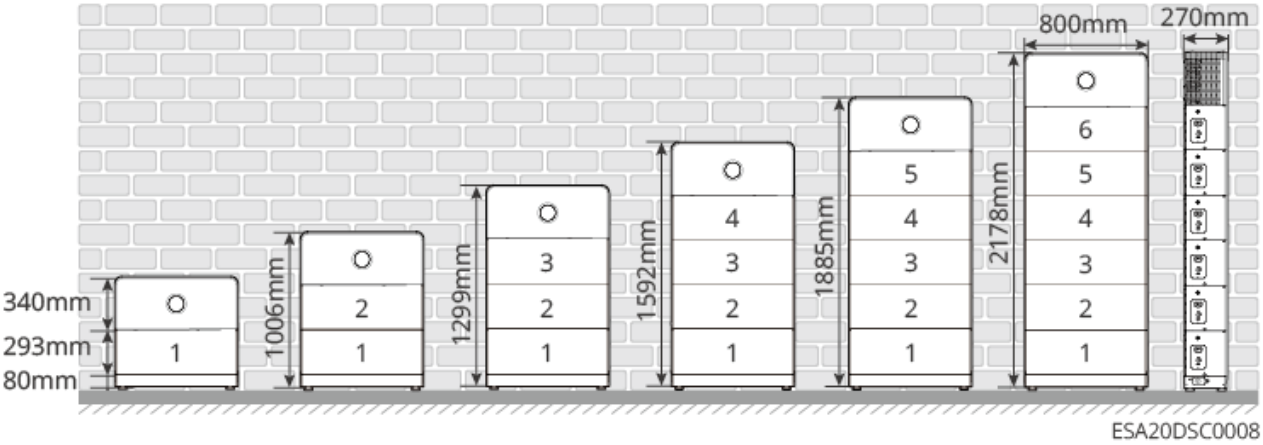

- wall-mounted installation

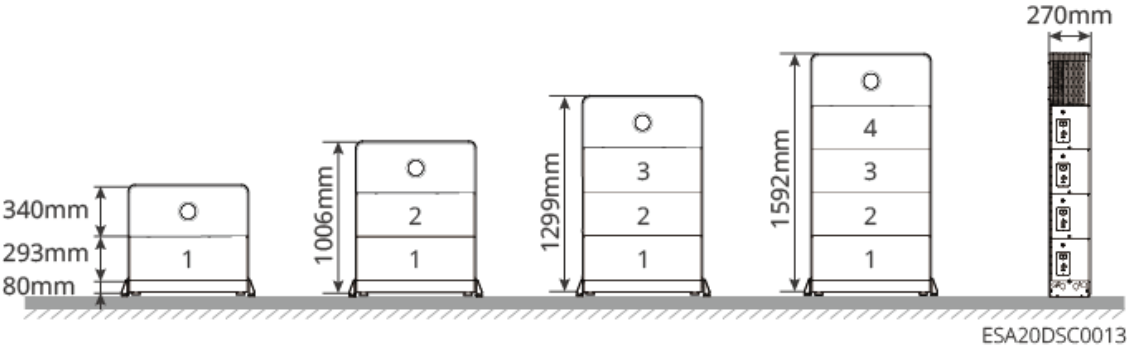

Battery Cluster Expansion Installation

- ground-mounted installation

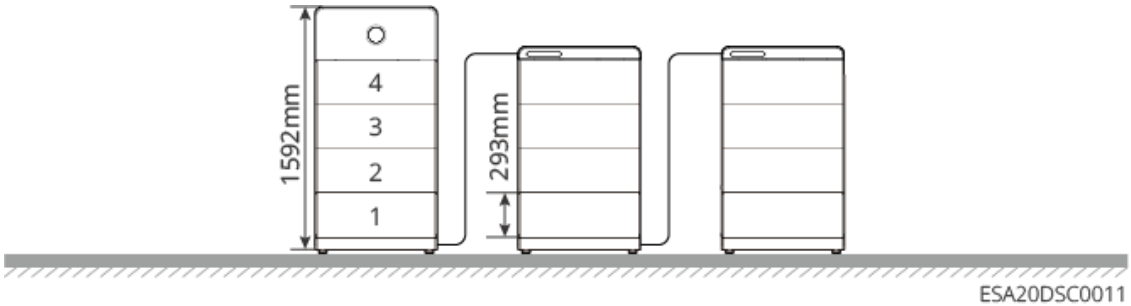

- Wall-mounted installation

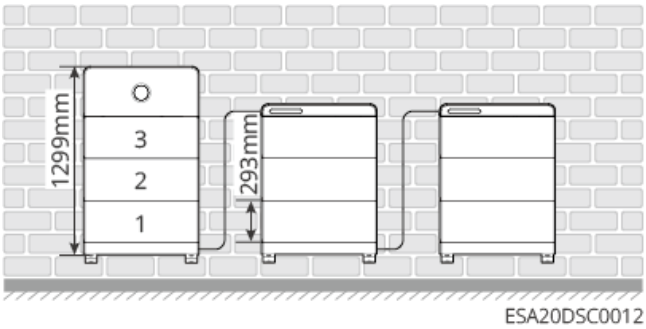

Inverter Appearance Description:

In the photovoltaic system, the inverter controls and optimizes energy flow through an integrated energy management system. The electricity generated by the photovoltaic system can be supplied to loads, stored in batteries, or exported to the grid.

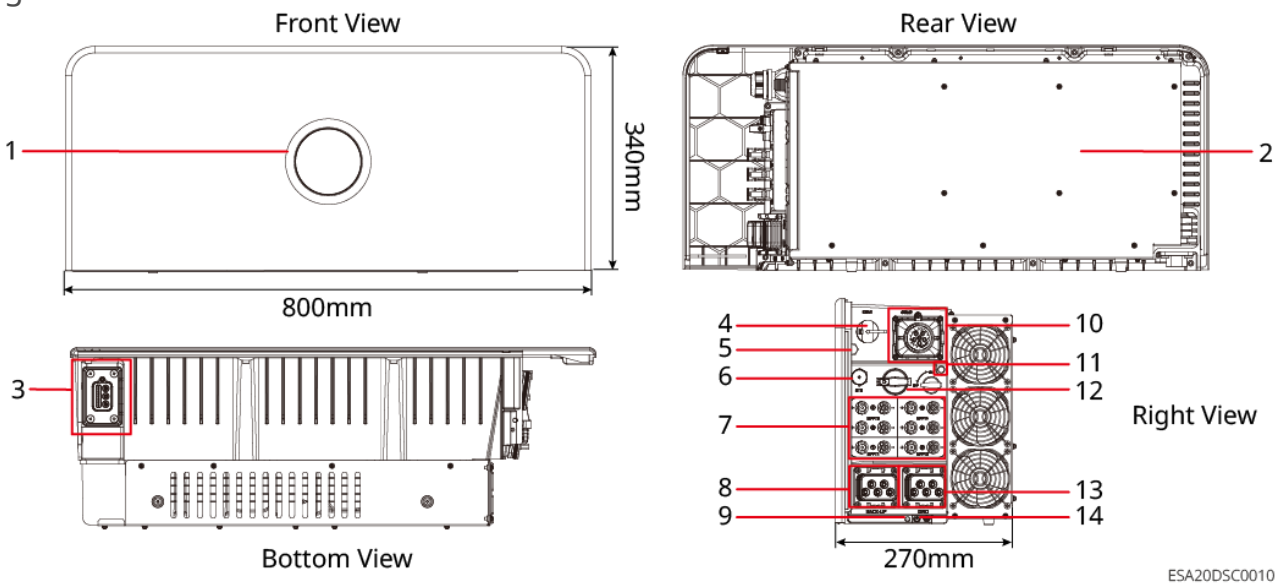

Serial Number	Component/Silkscreen	Description
1	indicator light	Indicates the operating status of the inverter.
2	heatsink	Inverter heat dissipation.
3	connector	Power and communication ports for inverter-to-battery connection.
4	Smart Communication Stick Connection Port	• Can be connected to a smart communication stick, such as WiFi/LAN or other communication modules. Please select the module type according to actual requirements. • Supports connecting a USB drive for Local Upgrade of the inverter software version.
5	breathing valve	-
6	STS communication interface	Connect Static Transfer Switch Cabinet (STS).
7	PV Input Terminal	Only ETA models, BTA models do not have PV input terminals. • Connectable to PV module DC input line. • Number of PV input terminals: ◦ GW5K-ETA-G20，GW6K-ETA-G20，GW8K-ETA-G20：3 ◦ GW9.999K-ETA-G20，GW10K-ETA-G20，GW12K-ETA-G20，GW15K-ETA-G20，GW20K-ETA-G20，GW25K-ETA-G20，GW29.999K-ETA-G20，GW30K-ETA-G20：4
8	BACK-UP port	Connect AC line to critical load or grid-tied inverter.
9	battery fixing hole	Stationary inverter and battery

Serial Number	Component/Silkscreen	Description
10	communication port	Connectable load control, CT, RS485, Remote Shutdown/Fast Shutdown, DRED (Australia)/RCR (Europe) and other communication lines.
11	Lifting bar mounting hole	Used for installing the hand lift bar. Use when handling inverter.
12	DC Switch	Only the ETA model has a DC switch; the BTA model does not. Control DC input connection or disconnection.
13	GRID port	Connect the AC lines to connect the inverter to the grid.
14	Protection earth terminal	Connect the box Protection earth wire.
15	cooling fan	Inverter heat dissipation. The number of cooling fans is as follows: • GW5K-ETA-G20，GW6K-ETA-G20，GW8K-ETA-G20，GW5K-BTA-G20，GW6K-BTA-G20， GW8K-BTA-G20，GW9.999K-ETA-G20，GW10K-ETA-G20，GW12K-ETA-G20，GW15K-ETA-G20，GW20K-ETA-G20，GW9.999K-BTA-G20，GW10K-BTA-G20，GW12K-BTA-G20，GW15K-BTA-G20，GW20K-BTA-G20：1 • GW25K-ETA-G20，GW29.999K-ETA-G20，GW30K-ETA-G20，GW25K-BTA-G20，GW29.999K-BTA-G20，GW30K-BTA-G20：3

Battery System Appearance Description:

The battery system can store and release electricity according to the requirements of the photovoltaic energy storage system. The input and output ports of this energy storage system are both high voltage direct current.

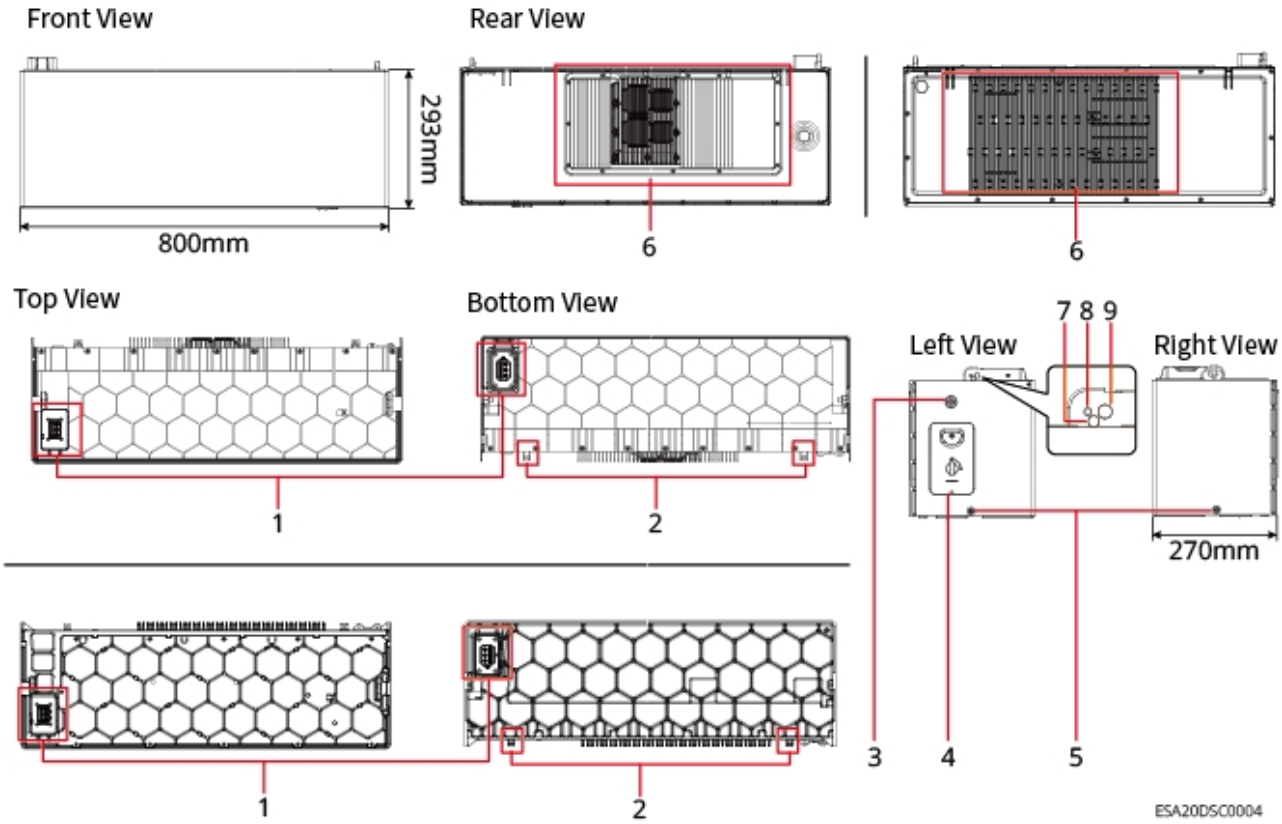

Serial Number	component	Description
1	connector	Power and communication ports for battery-to-battery and battery-to-inverter connections.
2	Anti-tilt bracket fixing hole	Used for fixing the battery to the wall.

Serial Number	component	Description
3	Multi-function button indicator light	• Indicate battery operating status. • Battery black start function: When the re is no PV power generation in the photovoltaic system and the grid is abnormal, the inverter cannot operate normally. At this time, long press the multifunction button for 2 seconds to start the battery system, activate the inverter, and make the inverter operate in off-grid mode, with the battery discharging to supply power to the load. • Battery power-off function: Long press the multi-function button for >5s to power off the battery system.
4	battery disconnect switch	Battery Power Input/Output Switch
5	battery compartment fixing hole	Fixation between two batteries.
6	heatsink	battery heat dissipation
7	battery lifting hole	For hoisting batteries. When stacking more than three battery modules, lifting tools shall be used for installation.
8	Battery or inverter mounting holes	Used for inter-battery fixing or inverter-to-battery fixing.
9	Lifting bar mounting hole	Used for installing the hand lift bar. For manual handling of batteries.

2.2.2 STS Appearance Description

Appearance

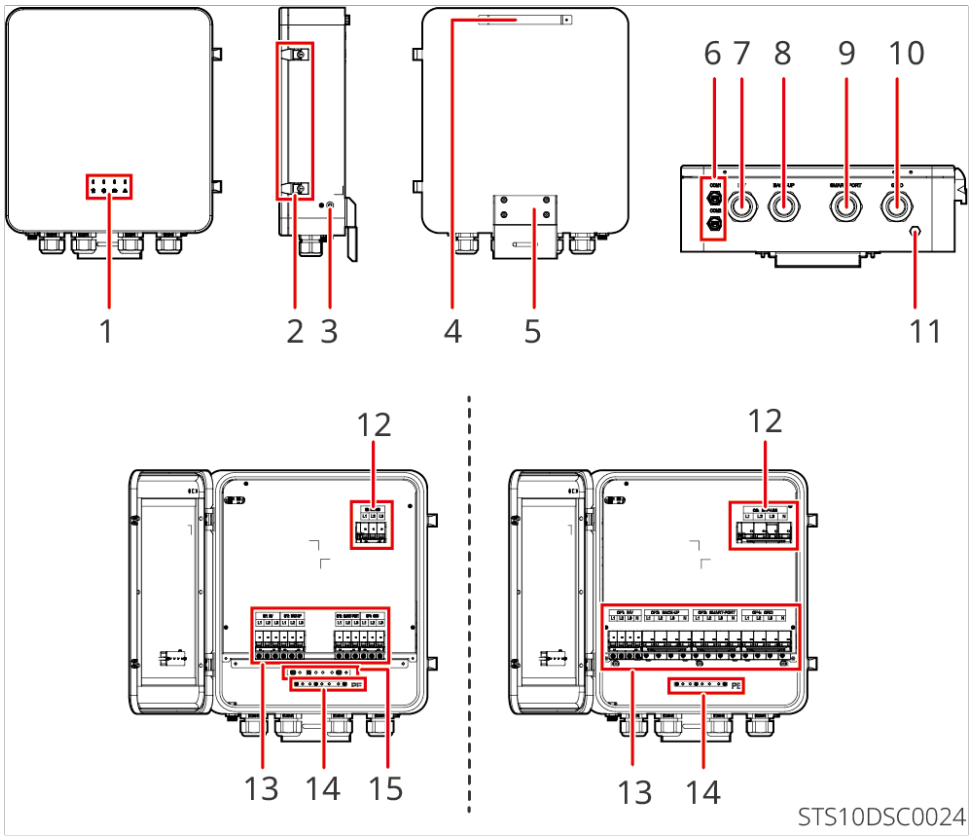

Serial Number	Component Name	Description
1	indicator light	Equipment working status indication
2	Locking latch	Cabinet door used to open/close STS
3	Protection earth terminal	Used to connect the enclosure grounding wire
4	mounting bracket	Used for hanging the device on the backplate.
5	Fixed support bracket	for wall mounting and supporting equipment

Serial Number	Component Name	Description
6	communication terminal	• COM1: Connect to inverter STS communication port. • COM2: Reserved
7	Inverter input cable entry	cable entry
8	BACK-UP Incoming Line Port	
9	Smart Port Inlet	
10	Grid inlet	
11	breathing valve	-
12	BYPASS switch	During inverter shutdown maintenance, if the STS BACK-UP port load needs to remain powered, close the BYPASS switch to supply the load directly from the mains; after the inverter is powered on and resumes operation, open the BYPASS switch to switch the load back to inverter supply.
13	circuit breaker and AC connection terminal	• INVERTER: Used for connecting the inverter • BACK-UP: for connecting BACKUP loads • SMART-PORT: Used to connect generators, large loads, or grid-tied inverters • GRID: used for connecting to the power grid
14	PE terminal block	Used for connecting the PE conductor.
15	Neutral terminal block (Australia only)	Used for connecting the neutral line

Dimension

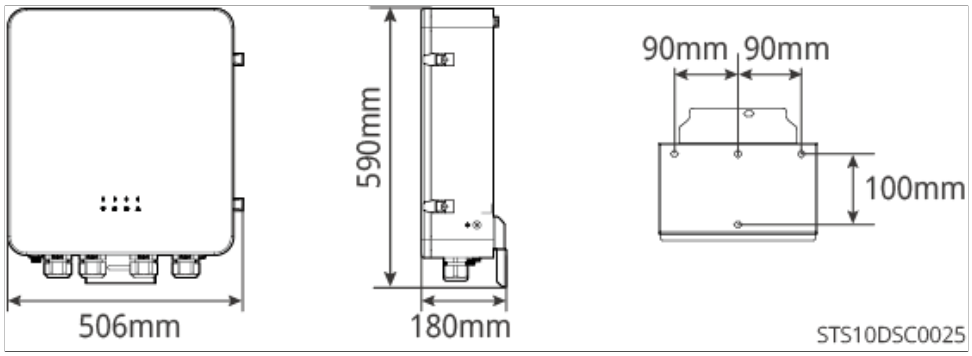

2.2.3 Smart Meter

The Smart Meter measures and monitors electrical data in the photovoltaic energy storage system, such as: voltage, current, frequency, Power Factor, power, etc.

GM330&GMK330&CT

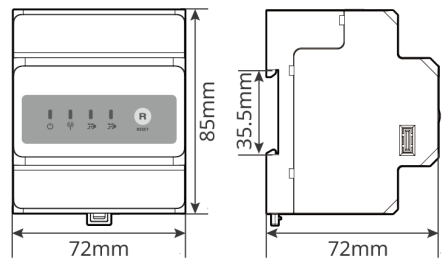

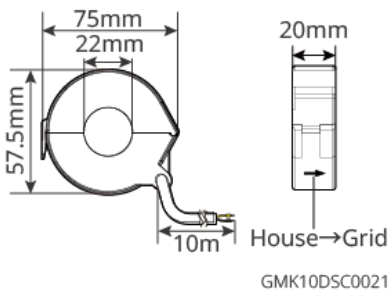

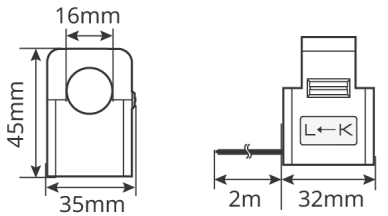

No.	model	Applicable Scenarios
1	GM330	CT can be purchased from GoodWe or separately. CT ratio requirement: nA: 5A • nA: CT primary side input current, n range is 200-5000 • 5A: CT secondary side output current
2	GMK330	CT is shipped with the meter. CT ratio: • 120A: 40mA

2.2.4 smart dongle

The smart dongle is mainly used for real-time transmission of various power generation data from inverters to remote monitoring platforms, and for connecting the smart dongle via an App for local device debugging.

WiFi/LAN Kit-20

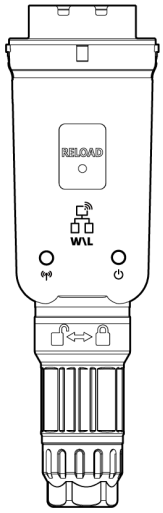

4G Kit-G20

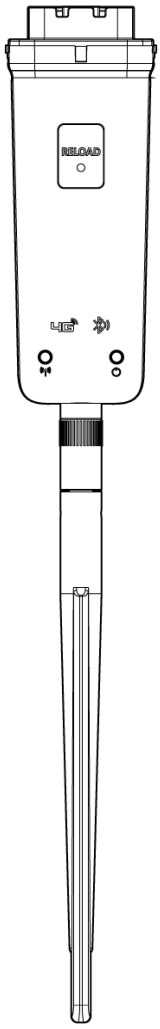

No.	model	Signal Type	Applicable Scenarios
1	WiFi/LAN Kit-20	WiFi, LAN, Bluetooth	Single-unit and multi-unit inverter scenarios
2	4G Kit-G20	4G, Bluetooth	Single-unit inverter scenarios.

2.3 Supported Grid Types

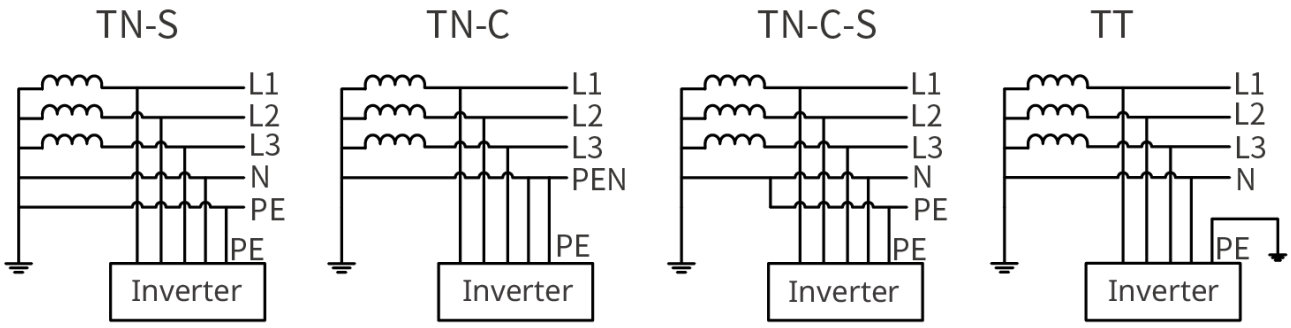

TNNET0003

2.4 System Working Mode

NOTICE
To calibrate the battery management system (BMS), the system automatically performs a full battery charge after the initial installation and commissioning is completed. After this process ends, the system operates according to the set working mode.

Self-consumption

- Basic mode of system operation.
- PV generation supplies power to loads first, excess power charges the battery, and any remaining power is sold to the grid. When PV generation cannot meet load demand, the battery supplies power to loads; when battery power also cannot meet load demand, the grid supplies power to loads.

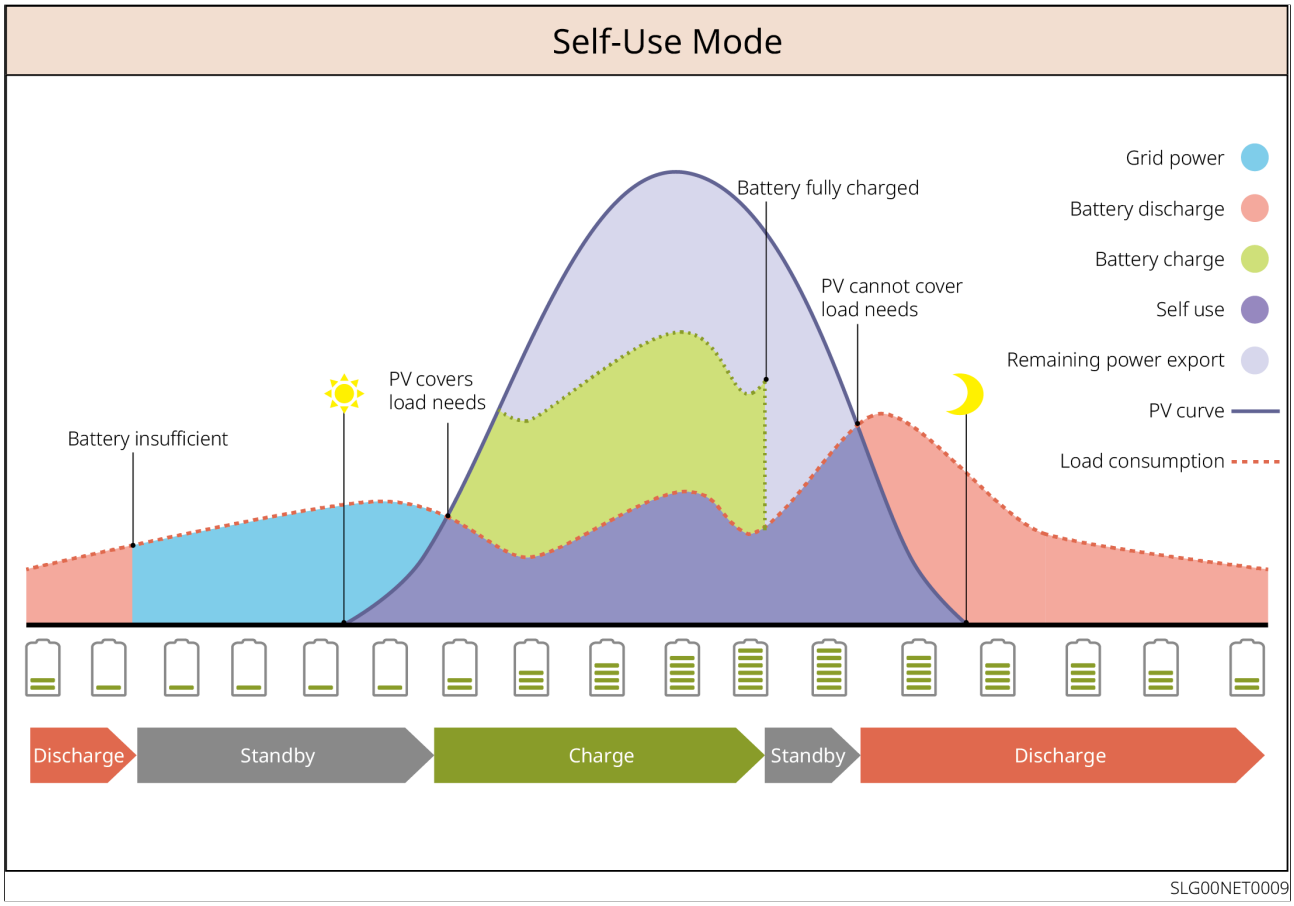

Figure7 Self-consumption

Backup Mode

- Recommended for areas with unstable grids.
- When the grid fails, the inverter switches to off-grid working mode, and the battery discharges to supply power to loads, ensuring that BACK-UP Loads remain powered; when the grid recovers, the inverter switches back to grid-tied operation.
- To ensure the battery SOC is sufficient for normal operation during off-grid conditions, the battery will be charged to the backup power SOC using PV or grid power while the system is grid-tied. If you need to charge the battery from the grid, ensure compliance with local grid laws and regulations.

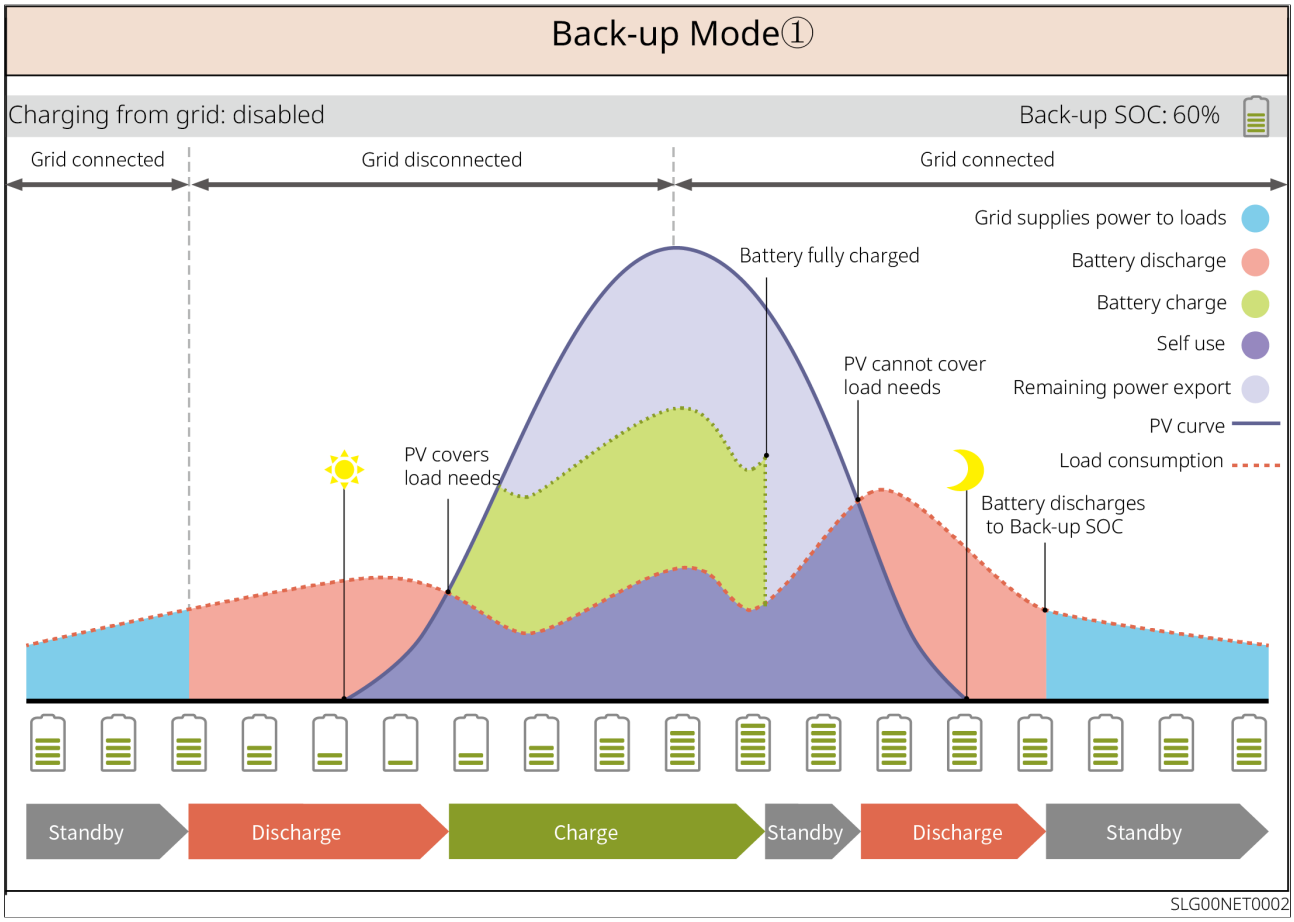

Figure8 Backup Mode 1

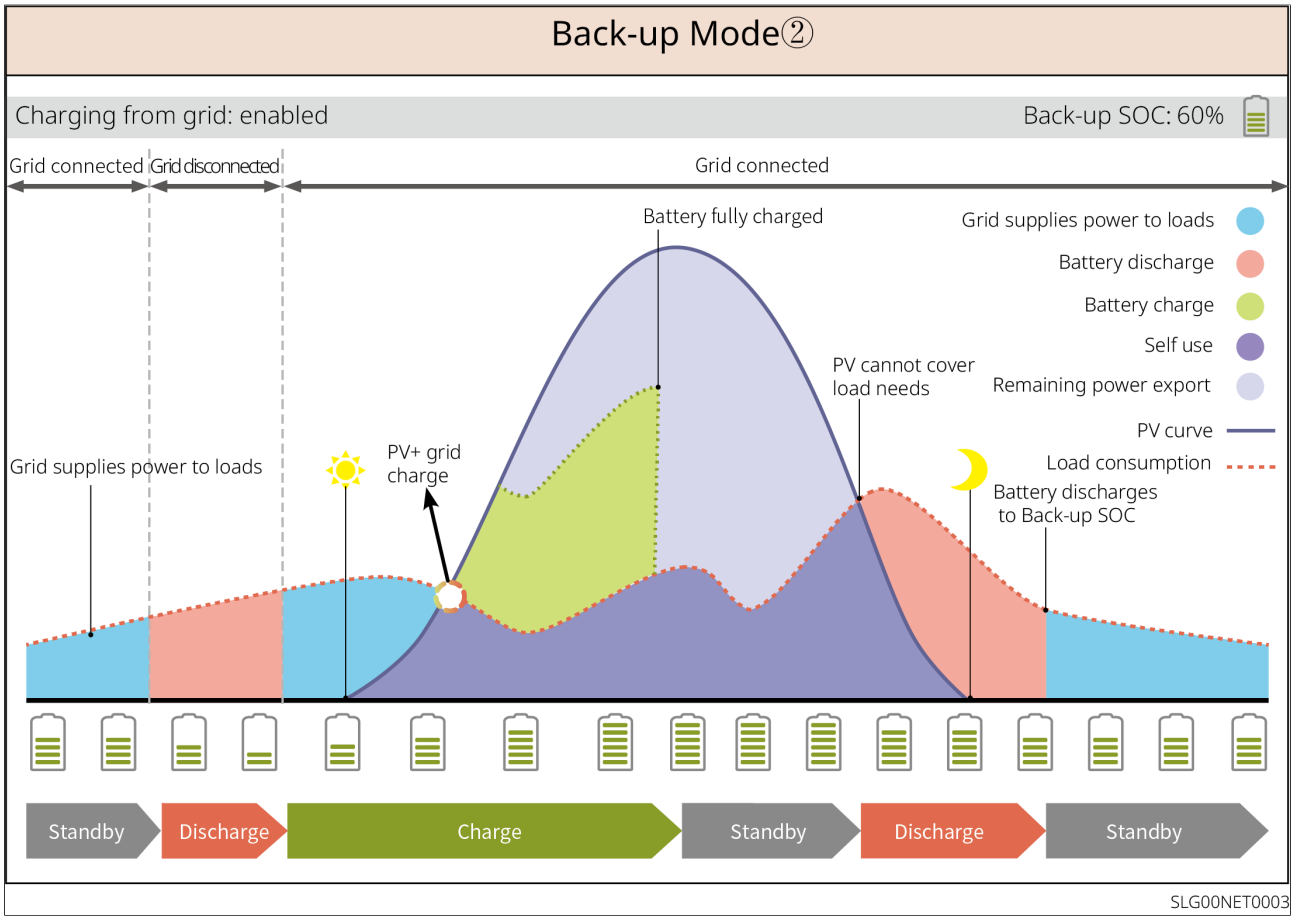

Figure9 Backup Mode 2

TOU Mode

Where permitted by local laws and regulations, set different time periods for buying and selling electricity based on grid peak/off-peak price differences.

For example, during off-peak electricity price periods, set the battery to charging mode and buy electricity from the grid to charge it; during peak price periods, set the battery to discharging mode to supply power to loads from the battery.

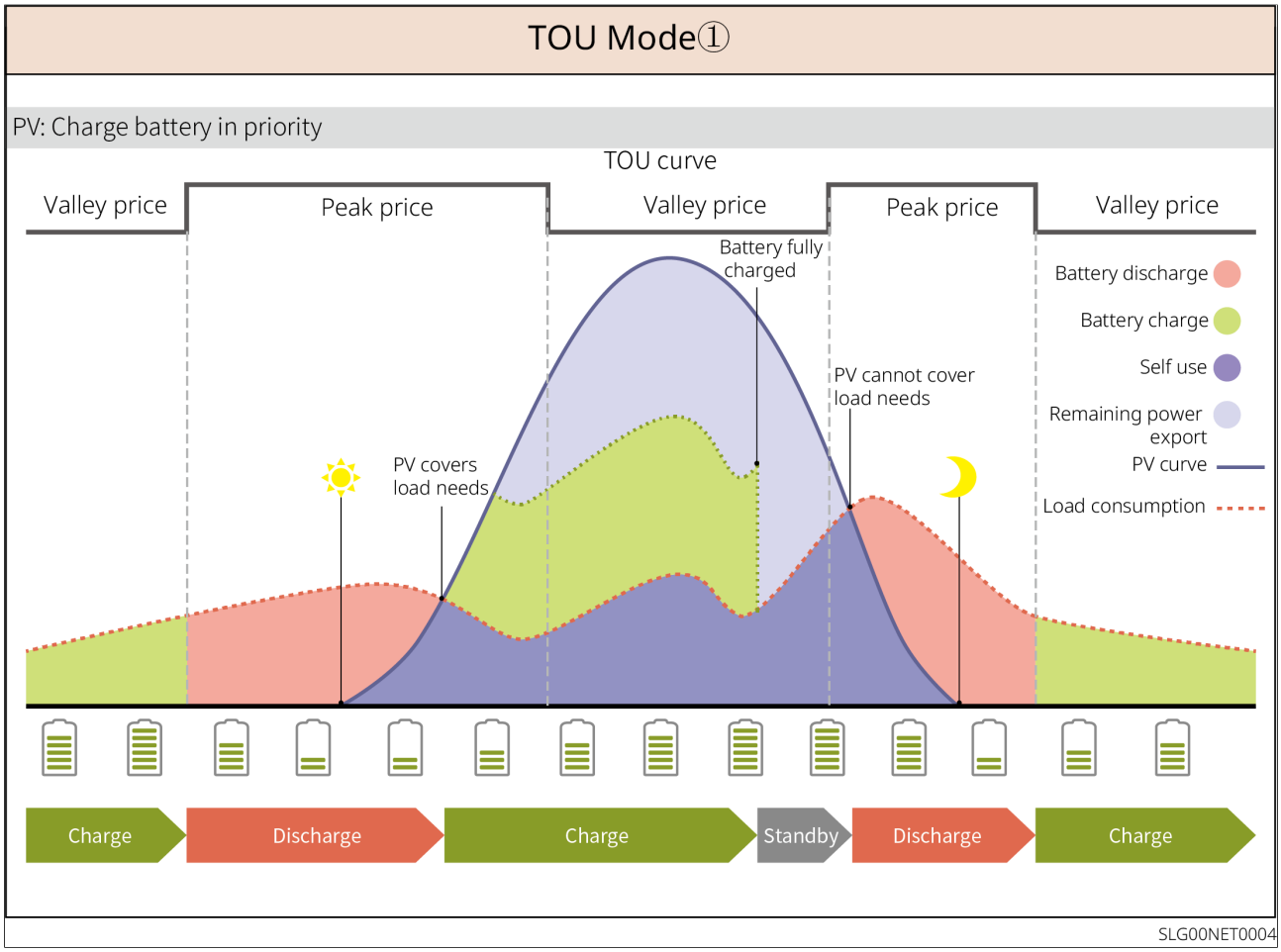

Figure10 TOU Mode 1

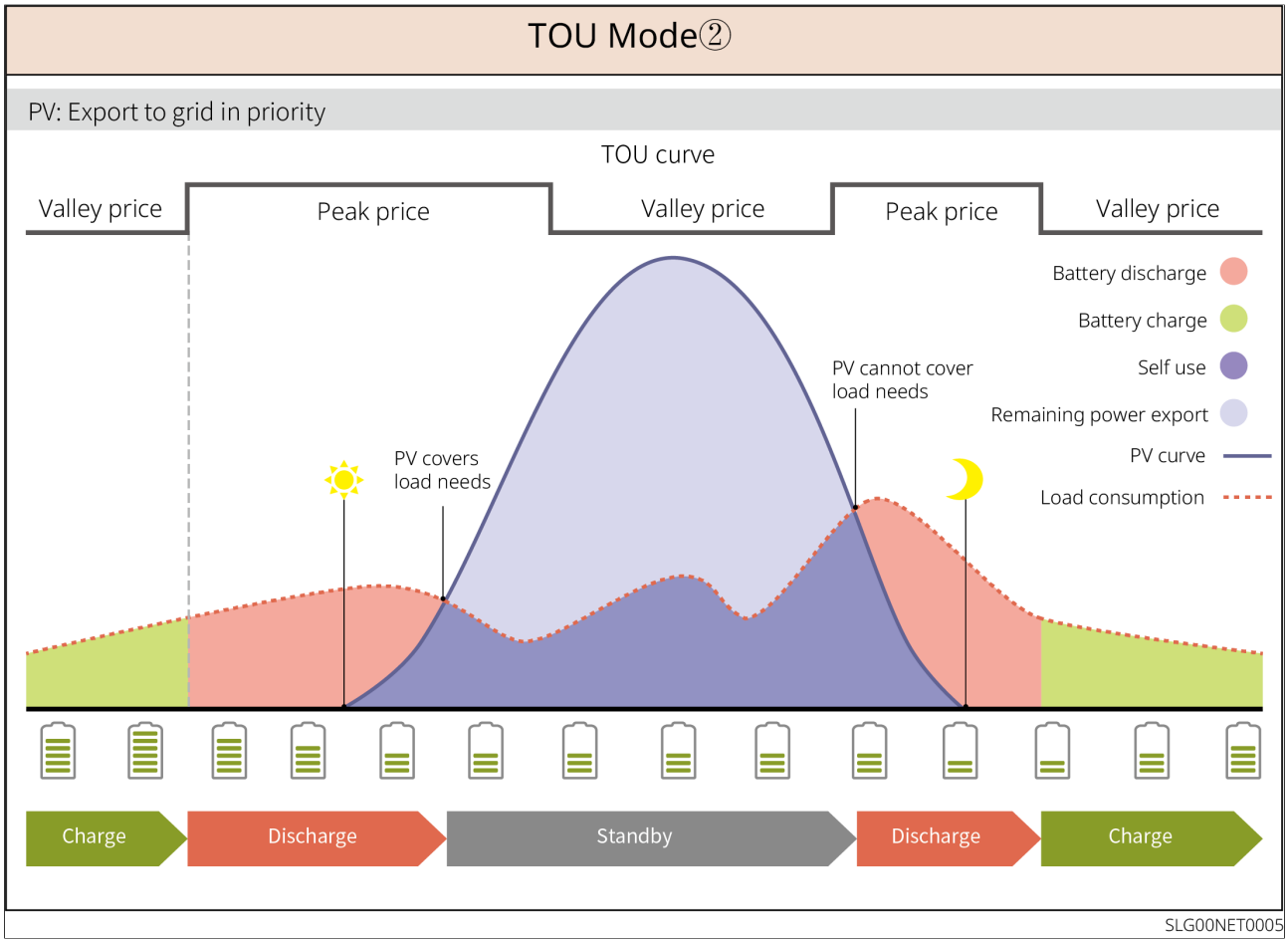

Figure11 TOU Mode 2

Smart Charging (Delayed Charging) Mode

- Applicable to areas with grid-tied power output limits.
- Setting a peak power limit allows PV generation exceeding the grid-tied limit to be used for charging the battery; alternatively, set a PV charging period to use PV generation to charge the battery during that period.

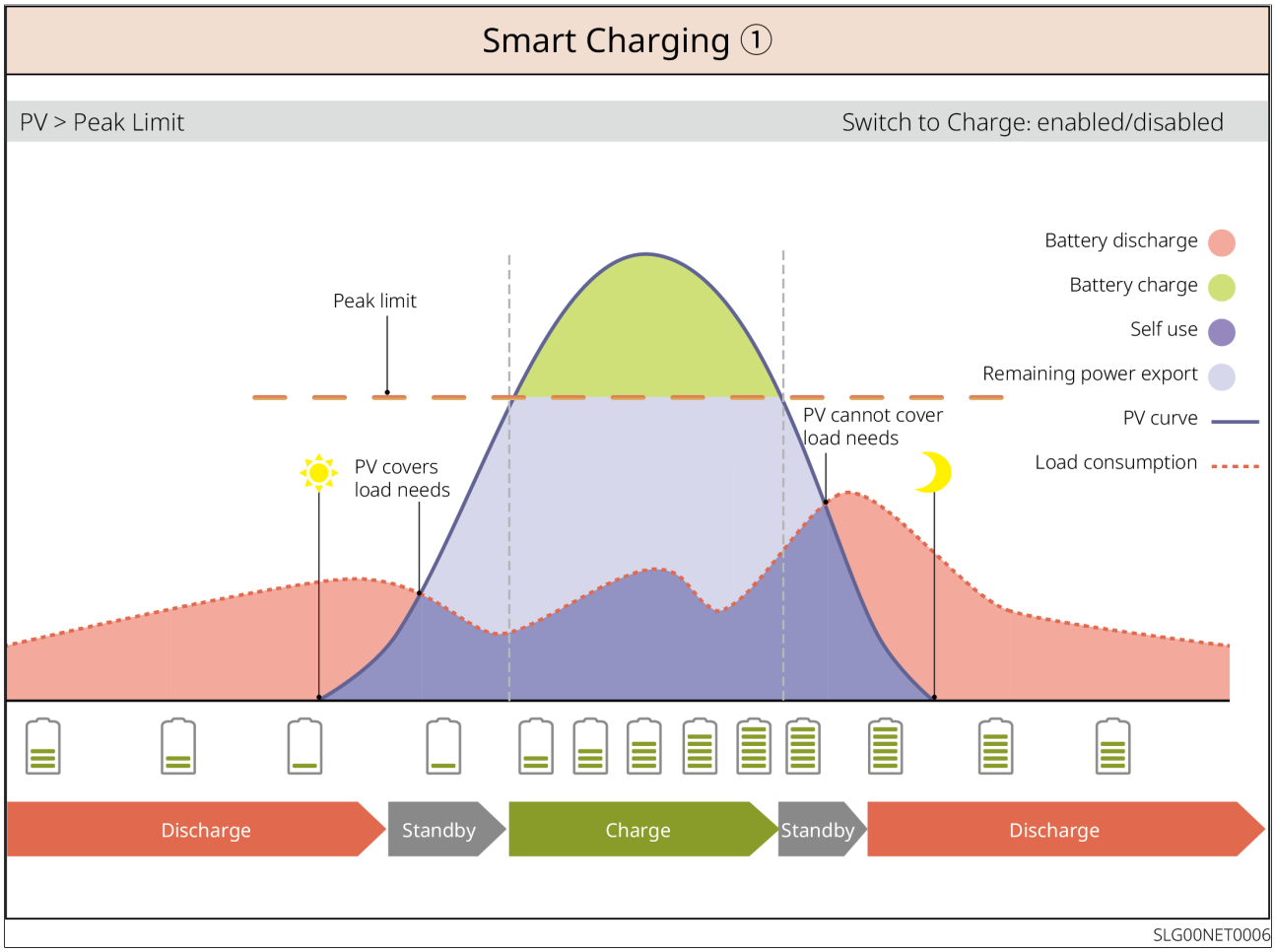

Figure12 Delayed Charging Mode 1

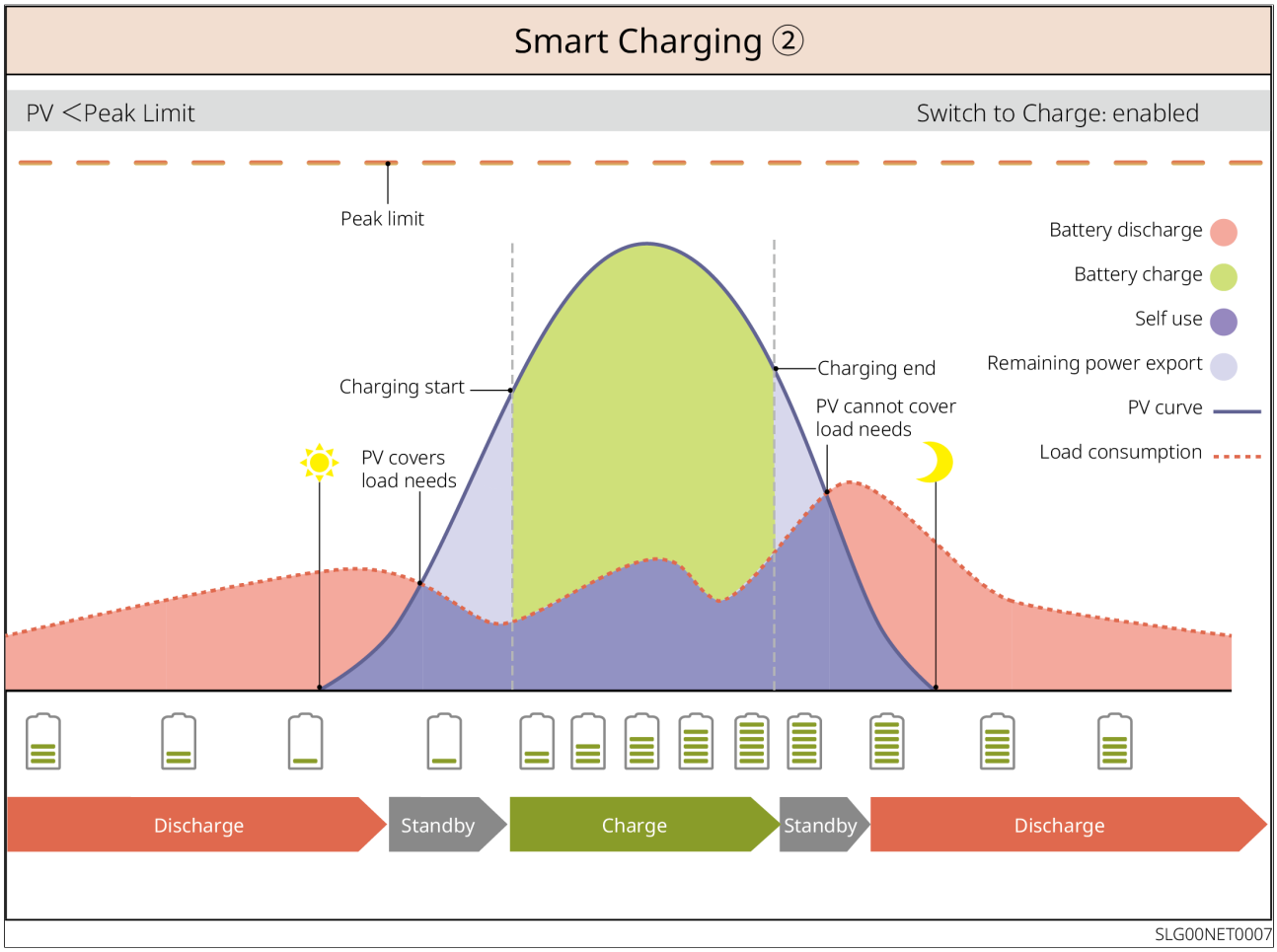

Figure13 Delayed Charging Mode 2

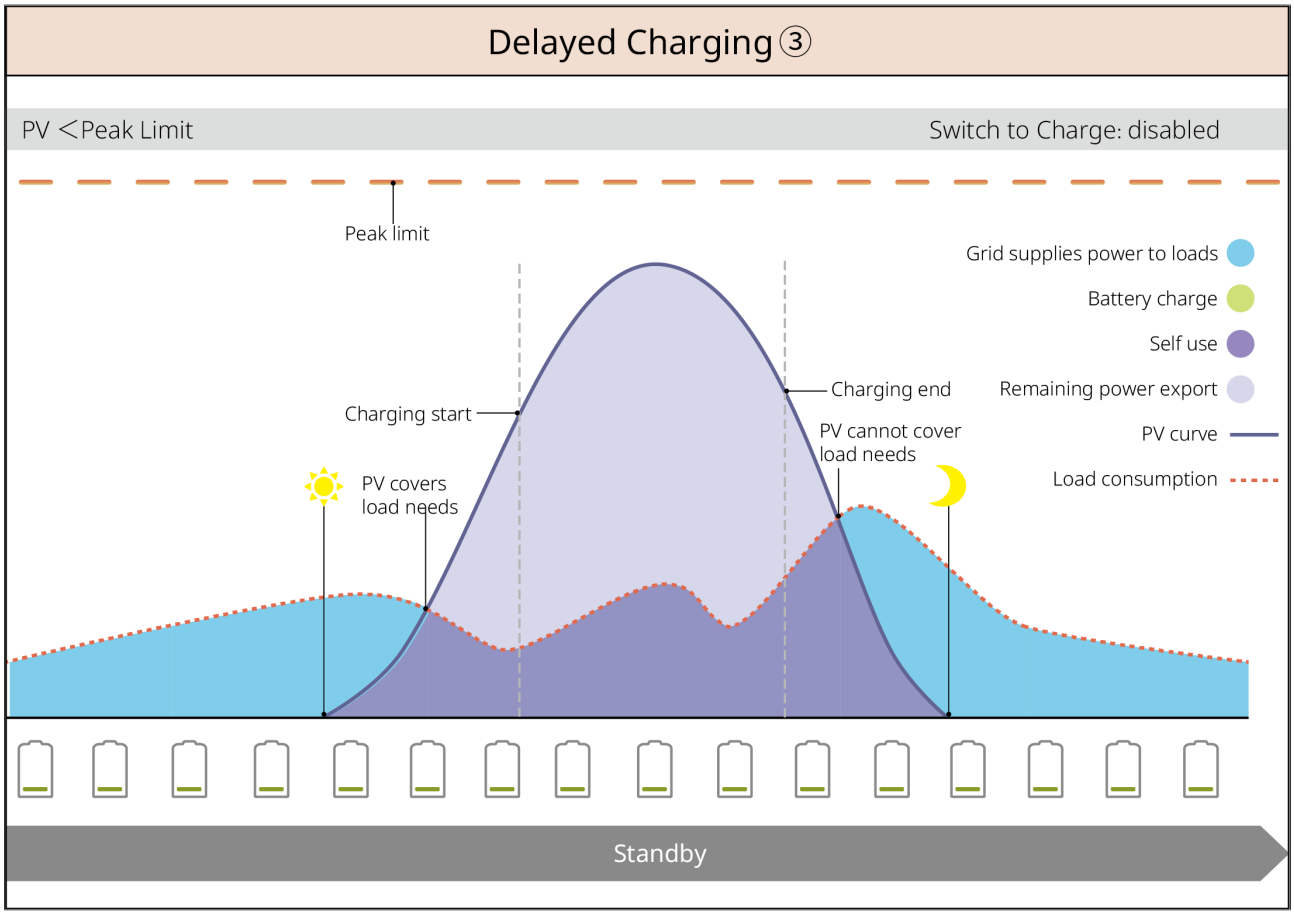

Figure14 Delayed Charging Mode 3

Peakshaving Mode

- Mainly applicable to industrial and commercial scenarios.
- When the total load power exceeds the electricity quota in a short period, battery discharge can be used to reduce the portion of electricity usage exceeding the quota.
- When all battery SOC levels are below the reserved SOC for peakshaving, the system buys electricity from the grid based on the time period, load consumption, and peak purchase limit.

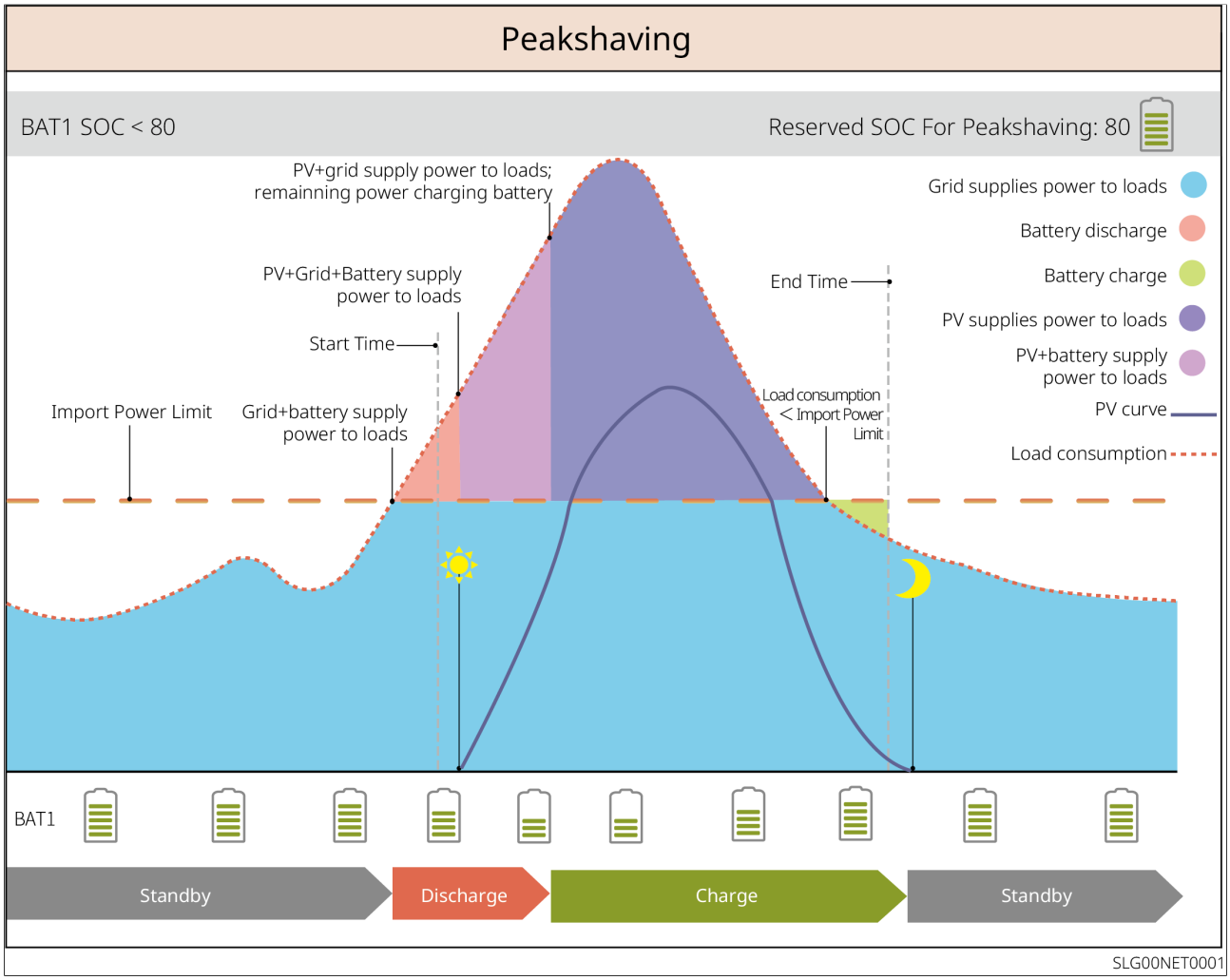

Figure15 Peakshaving Mode

Off-grid Mode

NOTICE
Do not run pure off-grid mode when the inverter is not connected to the battery system.

When the grid fails, the inverter switches to off-grid working mode.

- During the day, PV generation supplies power to loads first, and excess power charges the battery.
- At night, the battery discharges to supply power to loads, ensuring that BACK-UP Loads remain powered.

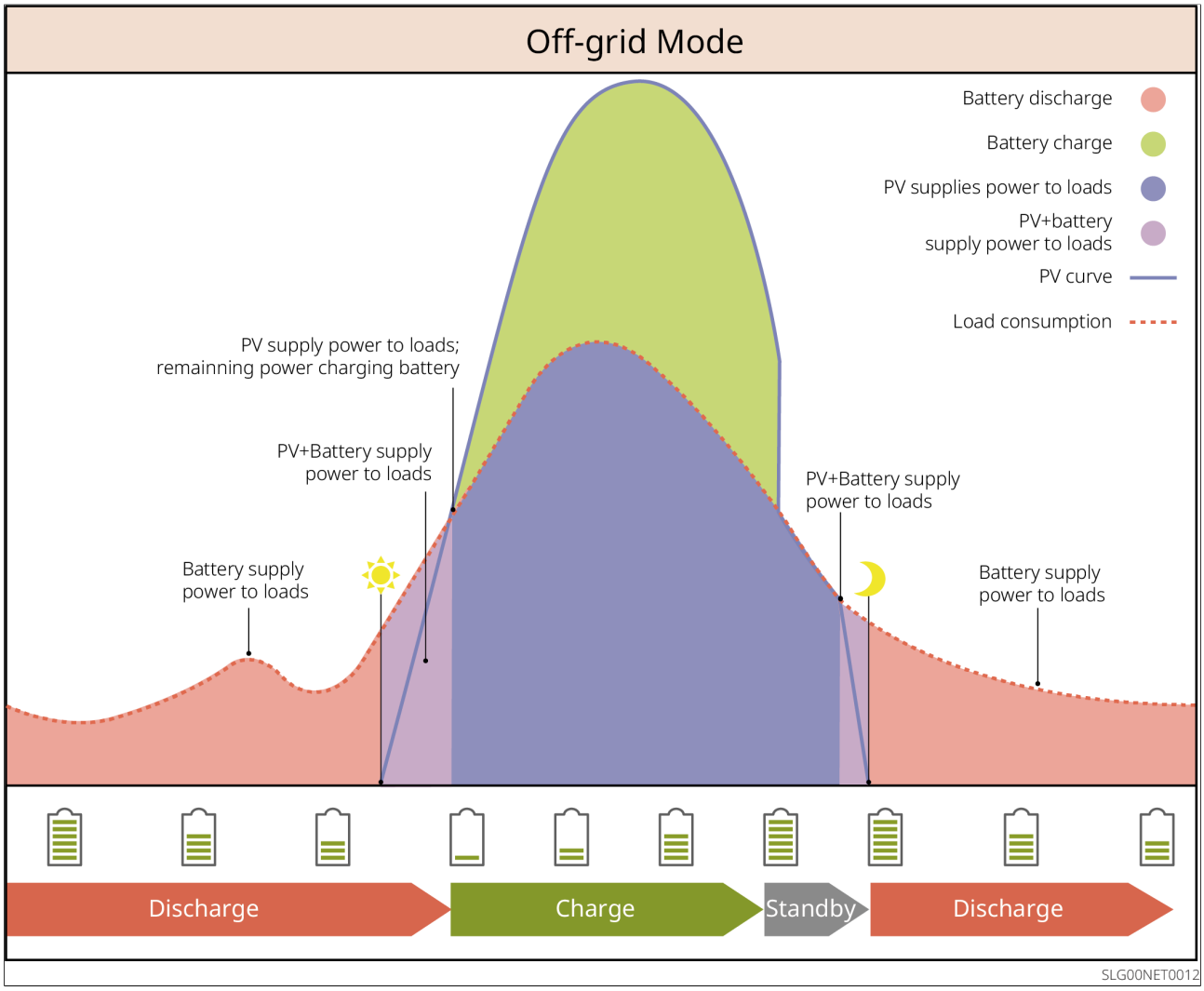

Figure16 Off-grid Mode

2.5 Features

NOTICE
Please refer to the actual product configuration for specific functional features.

AFCI

The inverter integrates an AFCI circuit protection device to detect arc faults and quickly cut off the circuit when detected, thereby preventing electrical fires.

Causes of arc generation:

- Damage to connector connections in the PV system.

- Incorrect or damaged cable connections.
- Aging of connectors or cables.

Fault handling methods:

1. When the inverter detects an arc, you can view the fault type via the App.
2. If the inverter triggers a fault <5 times within 24 hours, it will automatically restore grid connection after a 5-minute wait. After the 5th arc fault, the fault must be cleared before the inverter can resume normal operation. For specific operations, please refer to the *SEMS+ App User Manual*.

model	Label	Description
GW5K-ETA-G20 GW6K-ETA-G20 GW8K-ETA-G20	AFCI：F-I-AFPE-1-2/1-2	F（Full coverage）：Full coverage of inverter PV input ports I（Integrated）：Integrated within the inverter AFPE（arc fault protection equipment）：Combines both AFD and AFI arc detection functions 1：One pair of PV input ports (PV+, PV-) connects to one PV input string 2/1：One arc detection channel has 2 MPPT inputs; One arc detection channel has 1 MPPT input; 2：Has 2 arc detection channels

model	Label	Description
GW9.999K-ETA-G20 GW10K-ETA-G20 GW12K-ETA-G20 GW15K-ETA-G20 GW20K-ETA-G20	AFCI：F-I-AFPE-1-2/2-2	F（Full coverage）：Full coverage of inverter PV input ports I（Integrated）：Integrated within the inverter AFPE（arc fault protection equipment）：Combines both AFD and AFI arc detection functions 1：One pair of PV input ports (PV+, PV-) connects to one PV input string 2/2：Each arc detection channel has 2 MPPT inputs; 2：Has 2 arc detection channels
GW25K-ETA-G20 GW29.999K-ETA-G20 GW30K-ETA-G20	AFCI：F-I-AFPE-1-2/4-2	F（Full coverage）：Full coverage of inverter PV input ports I（Integrated）：Integrated within the inverter AFPE（arc fault protection equipment）：Combines both AFD and AFI arc detection functions 1：One pair of PV input ports (PV+, PV-) connects to one PV input string 2/4：One arc detection channel has 2 MPPT inputs; One arc detection channel has 4 MPPT inputs; 2：Has 2 arc detection channels

Three-Phase Unbalanced Output

Both the grid-tie side and the BACK-UP side of the inverter support three-phase unbalanced output, allowing connection of loads with different power ratings to each phase. The maximum output power per phase for different models is shown in the table below:

No.	model	Single-Phase Maximum Output Power
1	GW5K-ETA-G20 GW5K-BTA-G20	2.5kW
2	GW6K-ETA-G20 GW6K-BTA-G20	3kW
3	GW8K-ETA-G20 GW8K-BTA-G20	4kW
4	GW9.999K-ETA-G20 GW9.999K-BTA-G20	5kW
5	GW10K-ETA-G20 GW10K-BTA-G20	5kW
6	GW12K-ETA-G20 GW12K-BTA-G20	6kW
7	GW15K-ETA-G20 GW15K-BTA-G20	7.3kW
8	GW20K-ETA-G20 GW20K-BTA-G20	7.3kW
9	GW25K-ETA-G20 GW25K-BTA-G20	11kW
10	GW29.999K-ETA-G20 GW29.999K-BTA-G20	11kW
11	GW30K-ETA-G20 GW30K-BTA-G20	11kW

Rapid Shutdown (RSD) Rapid Shutdown
In a rapid shutdown system, the rapid shutdown transmitter and receiver work together to achieve rapid system shutdown. The receiver maintains module output by receiving signals from the transmitter. The transmitter can be external or built into the inverter. In case of an emergency, the transmitter can be deactivated by enabling an external trigger device, thereby shutting down the modules.

- External Transmitter
  - Transmitter models: GTP-F2L-20, GTP-F2M-20
    https://en.goodwe.com/Ftp/Installation-instructions/RSD2.0-transmitter.pdf
  - Receiver models: GR-B1F-20, GR-B2F-20

https://en.goodwe.com/Ftp/EN/Downloads/User%20Manual/GW_RSD-20_Quick-Installation-Guide-POLY.pdf

- Built-in Transmitter
  - External trigger device: External switch
  - Receiver models: GR-B1F-20, GR-B2F-20
    https://en.goodwe.com/Ftp/EN/Downloads/User%20Manual/GW_RSD-20_Quick-Installation-Guide-POLY.pdf

3 Check and Storage

3.1 Check Before Receiving

Before receiving the product, please carefully check the following:

1. Check if the outer packaging is damaged, such as deformation, holes, cracks, or other signs that could cause damage to the equipment inside the box. If damaged, do not open the packaging and contact your dealer.
2. Check if the device model is correct. If it does not match, do not open the packaging and contact your dealer.

3.2 deliverables

⚠WARNING

Check if the type and quantity of the delivered items are correct, and if there is any damage to the appearance. If there is any damage, please contact your dealer. After removing the delivered items from the packaging, do not place them on rough, uneven, or sharp surfaces to avoid paint chipping.

3.2.1 Inverter Deliverables

Part	Description	Part	Description
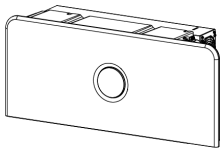	Inverter x 1		Decorative cover top x 1
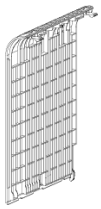	Decorative cover left x 1	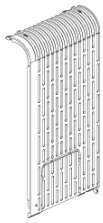	Decorative cover right x 1

Part	Description	Part	Description
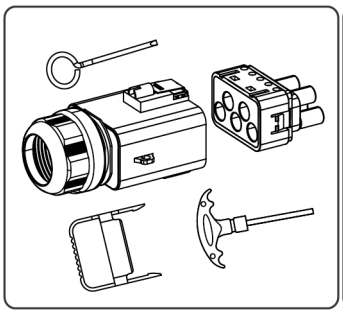 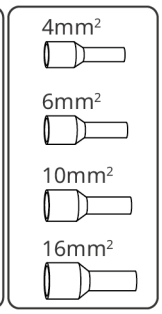 or 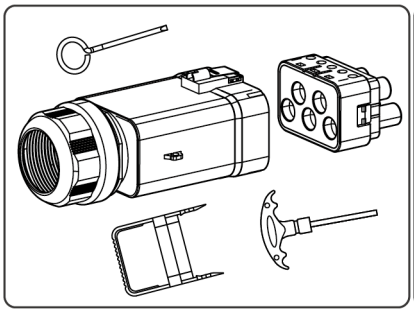 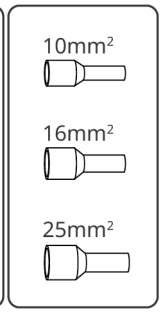			AC terminal kit x 2 • AC wiring terminal x 2 • PIN terminal x N ◦ 5-20kW: ▪ 4mm² x 5 ▪ 6mm² x 5 ▪ 10mm² x 5 ▪ 16mm² x 5 ◦ 25-30kW: ▪ 10mm² x 5 ▪ 16mm² x 5 ▪ 25mm² x 5

Part	Description	Part	Description
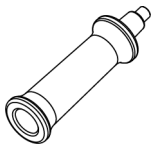	Handle x 2	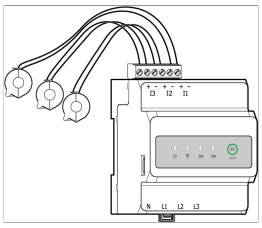	GMK330 Smart Meter x N • GW5K-ETA-G20 , GW6K-ETA-G20 , GW8K-ETA-G20, GW6K-EHA-G20, GW9.999K-ETA-G20, GW10K-ETA-G20, GW12K-ETA-G20, GW15K-ETA-G20, GW20K-ETA-G20, GW25K-ETA-G20, GW29.999K-ETA-G20, GW30K-ETA-G20 x 0 • GW5K-BTA-G20, GW6K-BTA-G20, GW8K-BTA-G20, GW9.999K-BTA-G20, GW10K-BTA-G20, GW12K-BTA-G20, GW15K-BTA-G20, GW20K-BTA-G20, GW25-BTA-G20, GW29.999K-BTA-G20, GW30K-BTA-G20 x 1
	OT grounding terminal x 1	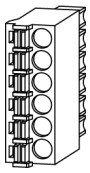	6-pin communication terminal x 2

Part	Description	Part	Description
	2-pin communication terminal x 2		PIN terminal x 16
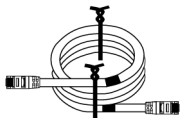	CT connection cable x 1	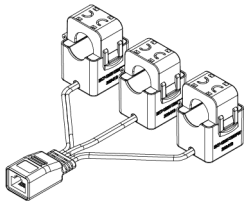	CT x 1
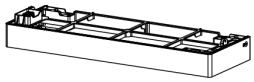	Battery base x 1		Adjustable foot x 4
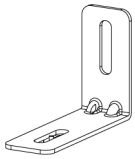	Anti-tip bracket x 4	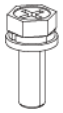	M5*16 screw x 9
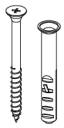	M5*60 expansion screw x 4	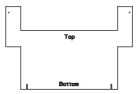	Drilling marking paper x 2
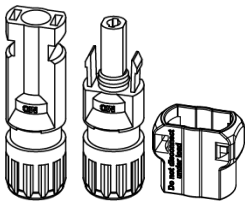		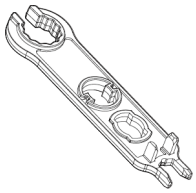	PV terminal unlocking tool x N N: China region x 0; other regions x 1.

Part	Description	Part	Description
	PV terminal and PV terminal anti-tamper cover • GW5K-ETA-G20 , GW6K-ETA-G20 , GW8K-ETA-G20, GW6K-EHA-G20：3 • GW9.999K-ETA-G20, GW10K-ETA-G20, GW12K-ETA-G20, GW15K-ETA-G20, GW20K-ETA-G20, GW25K-ETA-G20, GW29.999K-ETA-G20, GW30K-ETA-G20：4 • GW5K-BTA-G20, GW6K-BTA-G20, GW8K-BTA-G20, GW9.999K-BTA-G20, GW10K-BTA-G20, GW12K-BTA-G20, GW15K-BTA-G20, GW20K-BTA-G20, GW25-BTA-G20, GW29.999K-BTA-G20, GW30K-BTA-G20：0	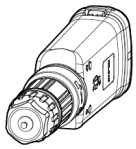	Smart Dongle x 1

Part	Description	Part	Description
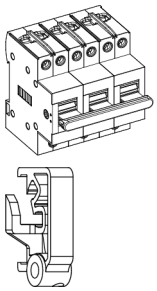	• (Australia only) Manual transfer switch x1 • Manual transfer switch lock x N Note: Only used in single-unit scenarios.	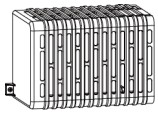	Cable cover x N N: Standard in Australia; optional in Europe.
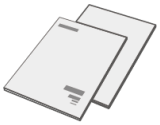	Product documentation x 1	-	-

(Europe only) Manual transfer switch

Component	Description
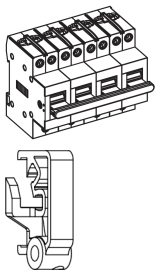	• Manual transfer switch x1 • Manual transfer switch latch x1 Note: For standalone use only. If needed, contact your dealer to purchase.

3.2.2 Batteries Deliverables (Lynx D G2)

Part	Description	Part	Description
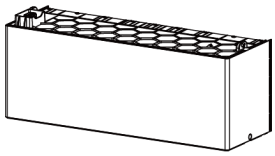	Battery x 1	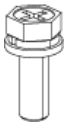	M5*16 screw x 2
	Silicone cap x 2	-	-

3.2.2.1 Battery Expansion Kit Deliverable (Optional)

NOTICE
The system supports 5-108kWh. A single column can stack up to 6 batteries. If there is more energy demand, or other scenarios requiring capacity expansion such as reducing the stacking height of a single column due to installation conditions, please contact GoodWe or a dealer to purchase a battery expansion kit.

Part	Description	Part	Description
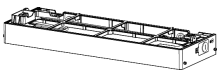	Base x 1	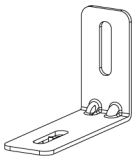	locking bracket x 4
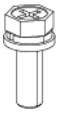	M5 screws x 7	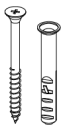	M6 expansion screws x 4
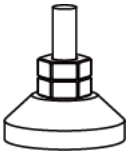	Adjustable feet x 4		OT grounding terminal x 1
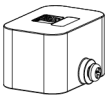	Terminal resistor x 1	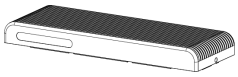	Battery decorative cover x 1
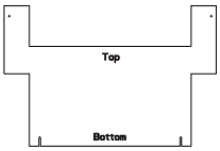	Drilling marking paper x 2	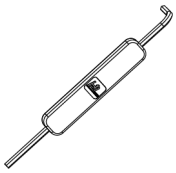	Hex wrench x 1
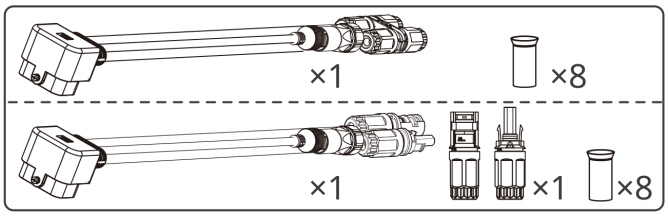			Battery expansion wiring harness x 1

Part	Description	Part	Description
	Unlocking tool x N		3m battery expansion connection positive wire harness x 1
	3m battery expansion connection negative wire harness x 1	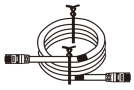	Battery expansion network cable x 1
	Silicone cap x 2	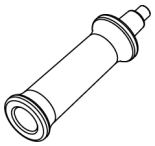	Handle x 2
	Product documentation x 1	-	-

3.2.2.2 Battery Rack Deliverable (Optional)

Component	Description	Component	Description
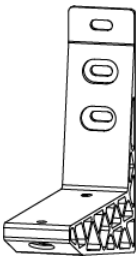	Mounting bracket x 2		M10 expansion bolt x 6
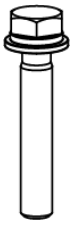	M10 screw x 4	-	-

3.2.2.3 Floor-Mounted Standoff Bracket (Optional)

Part	Description	Part	Description
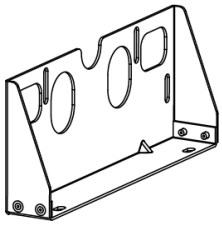	Floor-Mounted Standoff Bracket x 2	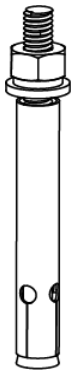	M6 expansion bolts x 4
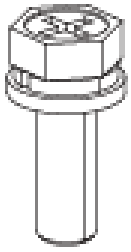	M5 mounting screws x 4	-	-

3.2.3 STS deliverable

Note
When different models of equipment are shipped to different markets, the required deliverables may vary. Please refer to the actual receipt.

component	Description	component	Description
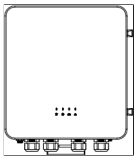	Static Transfer Switch Cabinet ×1	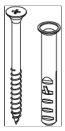	Expansion bolts ×6
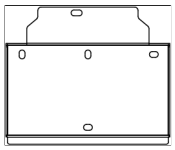	Back Mounting Plate ×1	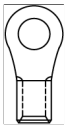	Neutral terminal ×4

component	Description	component	Description
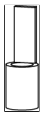	63A AC terminal × 16	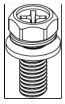	Neutral line locking screws ×4
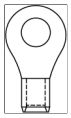	63A ground terminal ×4		Ground terminal screws × 4
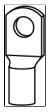	M8 enclosure grounding OT terminal × 1	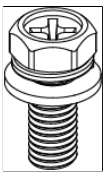	Enclosure grounding screw ×1
	Communication waterproof ring ×1	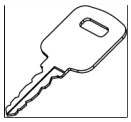	Cabinet door keys × 2
	ESA three-phase integrated machine communication conversion cable × 1	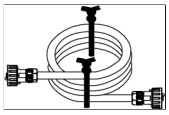	Inverter communication cable × 1
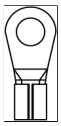	100A Grounding Terminal ×4	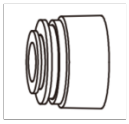	Gland sealing ring ×4
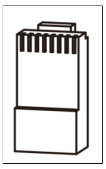	Communication RJ45 connector ×2		Manual ×1

Table42 GW30K-STS-G10-Australia Region

component	Description	component	Description
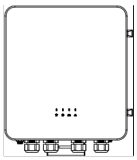	Static Transfer Switch Cabinet ×1	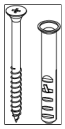	Expansion bolts ×6
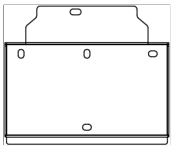	Back Mounting Plate ×1	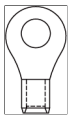	63A ground terminal ×4
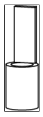	63A AC terminal × 16		Ground terminal screws × 4
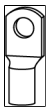	M8 enclosure grounding OT terminal × 1	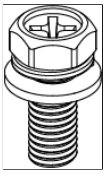	Enclosure grounding screw ×1
	Communication waterproof ring ×1	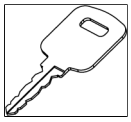	Cabinet door keys × 2
	ESA three-phase integrated machine communication conversion cable × 1	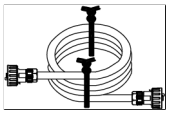	Inverter communication cable × 1
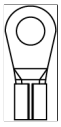	100A Grounding Terminal ×4	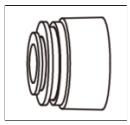	Gland sealing ring ×4

component	Description	component	Description
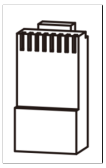	Communication RJ45 connector ×2		Manual ×1

Table43 GW30K-STS-G10-Other Regions

component	Description	component	Description
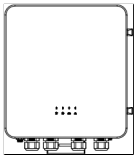	Static Transfer Switch Cabinet ×1	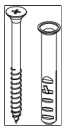	Expansion bolts ×6
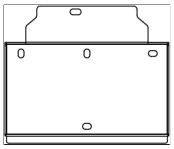	Back Mounting Plate ×1		100A AC terminals × 12
	63A AC terminals ×4	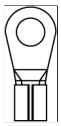	100A Grounding Terminal ×4
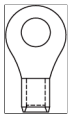	63A ground terminal ×4		Ground terminal screws × 4
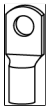	M8 enclosure grounding OT terminal × 1	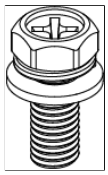	Enclosure grounding screw ×1

component	Description	component	Description
	Communication waterproof ring ×1	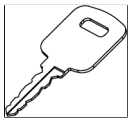	Cabinet door keys × 2
	ESA three-phase integrated machine communication conversion cable × 1	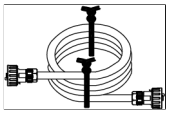	Inverter communication cable × 1
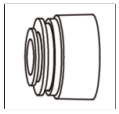	Gland sealing ring ×4	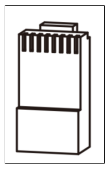	Communication RJ45 connector ×2
	Manual ×1	-	-

Table44 GW60K-STS-G10-Other Regions

3.2.4 Smart Meter Delivery Set GM330&GMK330

3.2.4.1 Attachment List

Component	Instructions	Component	Instructions
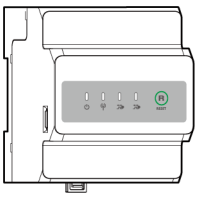	Smart Meterx1 GMK330:CT×3; GMK360: CT×6; GM330: CT x 0。		2PIN connector x1 Applicable to GM330.

Component	Instructions	Component	Instructions
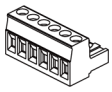	6PIN communication terminal x1 Applicable to GM330.	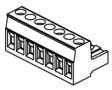	7PINcommunication terminal x1 Applicable to GM330.
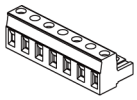	Electricity meter Applicable to GMK330/GMK360.		RS485communication terminal x 1
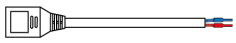	2PINterminal andRJ45terminal adapter cable x 1		screwdriver x1
	PIN terminal GMK330/GMK360: x 5 ; GM330: x 6。		Product Documentation x 1

3.3 Storage

- If the inverter has been stored for more than two years or has not been in operation for more than 6 months after installation, it is recommended that it be inspected and tested by professionals before being put into use.
- To ensure good electrical performance of the internal electronic components of the inverter, it is recommended to power it on once every 6 months during storage; if it has not been powered on for more than 6 months, it is recommended that it be inspected and tested by professionals before being put into use.
- To ensure battery performance and service life, avoid long-term idle storage. Long-term storage may cause deep discharge of the battery, resulting in irreversible chemical loss, leading to capacity attenuation or even complete failure, so use it promptly. If the battery needs long-term storage, perform maintenance according to the following requirements:

NOTICE
[1] The storage time is calculated from the SN date on the battery outer packaging. After the storage period is exceeded, charge/discharge maintenance is required. (Battery maintenance time = SN date + charge/discharge maintenance cycle). For how to check the SN date, see: 10.3.Battery SN Code Meaning(Page 348). [2] After passing charge/discharge maintenance, if the outer box is affixed with a Maintaining Label, please update the maintenance information on the Maintaining Label. If there is no Maintaining Label, please record the maintenance time and battery SOC yourself and keep the data properly for preservation of maintenance records.

Battery Model	Initial SOC Range for Battery Storage	Recommended Storage Temperature	Charge/Discharge Maintenance Cycle[1]	Battery Maintenance Method[2]
GW5.1-BAT-D-G20	30~40%	0~35℃	-20~35℃, 12 months 35~45℃, 6 months	For maintenance methods, please consult your dealer or after-sales service center.
GW8.3-BAT-D-G20				
GW5.1-BAT-D-G21				
GW8.3-BAT-D-G21				
GW6.0-BAT-D-G20	30~40%	0~35℃	-20~35℃, 12 months 35~45℃, 6 months 45~55℃, 1 month	
GW9.0-BAT-D-G20				

Packaging requirements:
Ensure that the outer packaging box is not removed and the desiccant inside the box is not lost.
Environmental requirements:

1. Ensure the equipment is stored in a cool place, away from direct sunlight.
2. Ensure the storage environment is clean, with appropriate temperature and humidity ranges, and no condensation. If condensation occurs on the equipment ports, do not install the equipment.
   - Storage humidity range for GW5.1-BAT-D-G20, GW8.3-BAT-D-G20, GW5.1-BAT-D-G21, GW8.3-BAT-D-G21: 5%–95%.
   - Storage humidity range for GW6.0-BAT-D-G20 , GW9.0-BAT-D-G20: 4%–100%.
3. Ensure the equipment is stored away from flammable, explosive, corrosive, and other similar items.
4. Stacking requirements:
   - Ensure the stacking height and direction of the equipment comply with the label instructions on the packaging box.
   - Ensure there is no risk of tipping after stacking.

4 Installation

⚠DANGER

When performing equipment installation and electrical connections, please use the delivery items shipped with the box. Otherwise, any resulting equipment damage will not be covered under warranty.

4.1 Installation Requirements

4.1.1 Installation Environment Requirements

NOTICE

- Inverter operating temperature range: -35℃-60℃.
- GW5.1-BAT-D-G20, GW8.3-BAT-D-G20: Charging temperature range: -18℃-55℃; Discharging temperature range: -20℃-55℃. If installed in environments below -18℃, the battery will not be able to continue charging to recover energy after being fully discharged, causing undervoltage protection of the battery.
- GW5.1-BAT-D-G21, GW8.3-BAT-D-G21: Charging temperature range: 2℃-55℃; Discharging temperature range: -20℃-55℃. If installed in environments below 2℃, the battery will not be able to continue charging to recover energy after being fully discharged, causing undervoltage protection of the battery.
- GW6.0-BAT-D-G20, GW9.0-BAT-D-G20: Charging temperature range: -20℃-55℃; Discharging temperature range: -20℃-55℃. If installed in environments below -20℃, the battery will not be able to continue charging to recover energy after being fully discharged, causing undervoltage protection of the battery.

1. The equipment must not be installed in flammable, explosive, corrosive, or other hazardous environments.
2. Choose an installation environment with good ventilation and uniform temperature and humidity distribution, and ensure that the ambient temperature and humidity always meet the operating range specified in the manufacturer's specification.
3. It is recommended to install the equipment in a sheltered location, avoiding direct

sunlight, rain, snow accumulation, etc. If on-site conditions do not allow full shielding, ensure that ambient temperature, humidity, etc. remain within the allowable range specified in the equipment specification, and take necessary protective measures.

4. Adverse environmental conditions such as direct sunlight and high temperatures may cause the inverter's output power to derate. When selecting the installation location, fully consider heat dissipation conditions and avoid direct sunlight on the equipment body.
5. The installation and storage location should avoid areas where cold air blows directly, such as air conditioner outlets. Excessive local temperature differences may cause condensation inside the equipment, which may lead to equipment damage.
6. The installation position must be out of reach of children and avoid locations prone to accidental contact.
7. The surface may be hot during operation. Beware of burns.
8. The installation space must meet the equipment's ventilation and heat dissipation requirements, as well as the operating space requirements.
9. The installation environment must meet the equipment's protection rating. Inverters, batteries, and smart communication sticks are suitable for indoor and outdoor installation; electricity meters are suitable for indoor installation.
10. The installation height must facilitate operation and maintenance, ensure that indicator lights and all labels are easy to view, and that wiring terminals are easy to operate.
11. The installation altitude must be lower than the maximum working altitude.
12. The equipment generates some noise during operation. When selecting the installation location, fully consider the impact of noise on the surrounding environment. The installation position should be far from noise-sensitive areas, including but not limited to: residential areas, schools, hospitals, nursing homes, office buildings, etc.
13. Before installing equipment outdoors in salt-damaged areas, please consult the equipment manufacturer. Salt-damaged areas mainly refer to areas within 500 m of the coastline. The affected area depends on sea breeze, precipitation, terrain, and other conditions.
14. Keep away from strong magnetic field environments to avoid electromagnetic interference. If there are radio stations or wireless communication devices below 30 MHz near the installation location, install the equipment according to the following requirements:
    - Inverter: Add a multi-turn ferrite core to the inverter's DC input line or AC output line, or add a low-pass EMI filter; or maintain a distance of more than 30 m

between the inverter and the wireless electromagnetic interference equipment.

- Other equipment: The distance between the equipment and the wireless electromagnetic interference equipment must be more than 30 m.

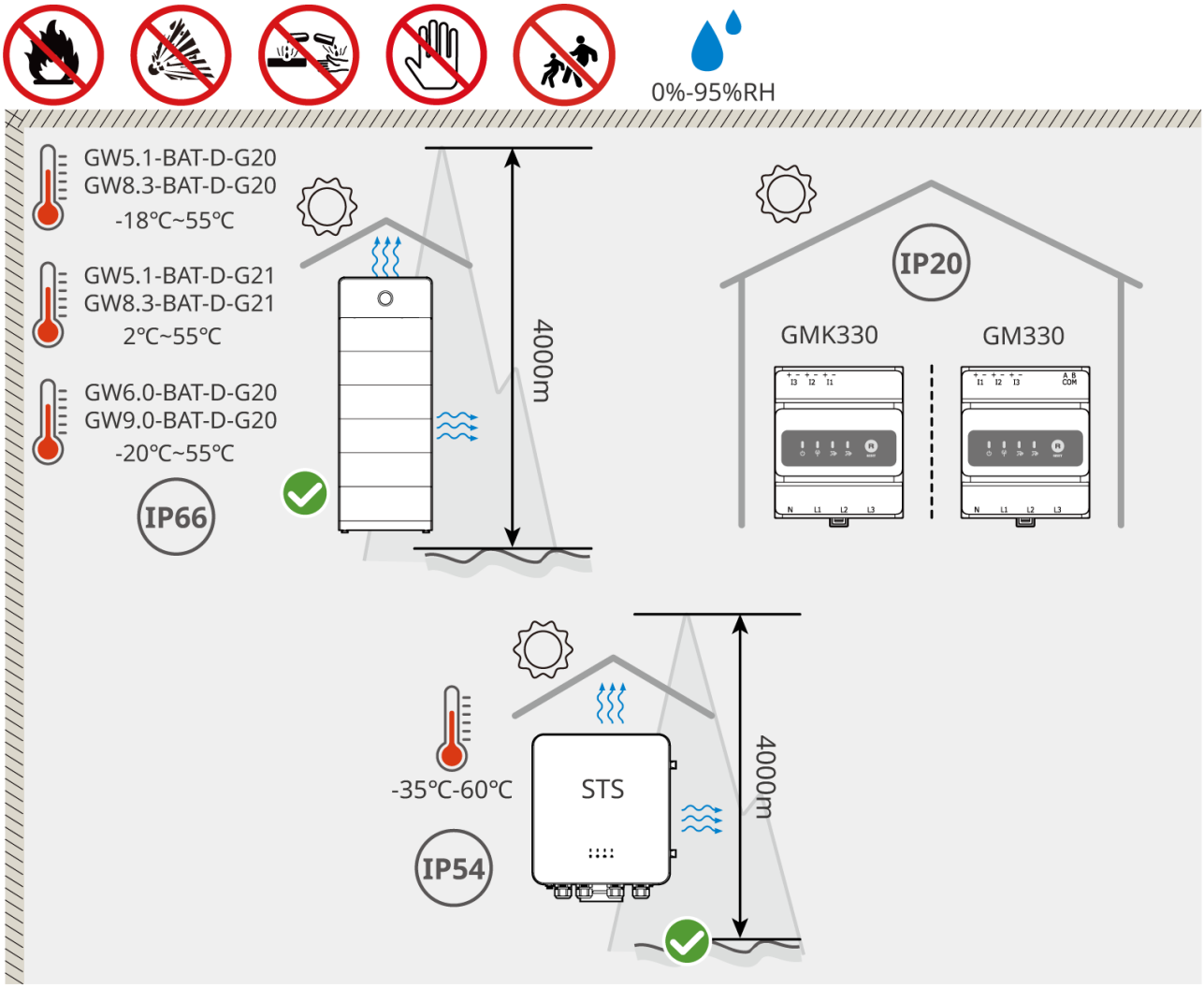

ESA20INT0011

4.1.2 Installation Space Requirements

1. **Installation Space**

- Ventilation, Heat Dissipation, and Operating Space
  - The installation space must meet the equipment's ventilation and heat dissipation requirements, ensuring sufficient heat dissipation clearance around the equipment.
  - The installation space must meet operating space requirements to facilitate

routine inspections, wiring, and maintenance operations.

- The equipment installation height must be convenient for operation and maintenance.

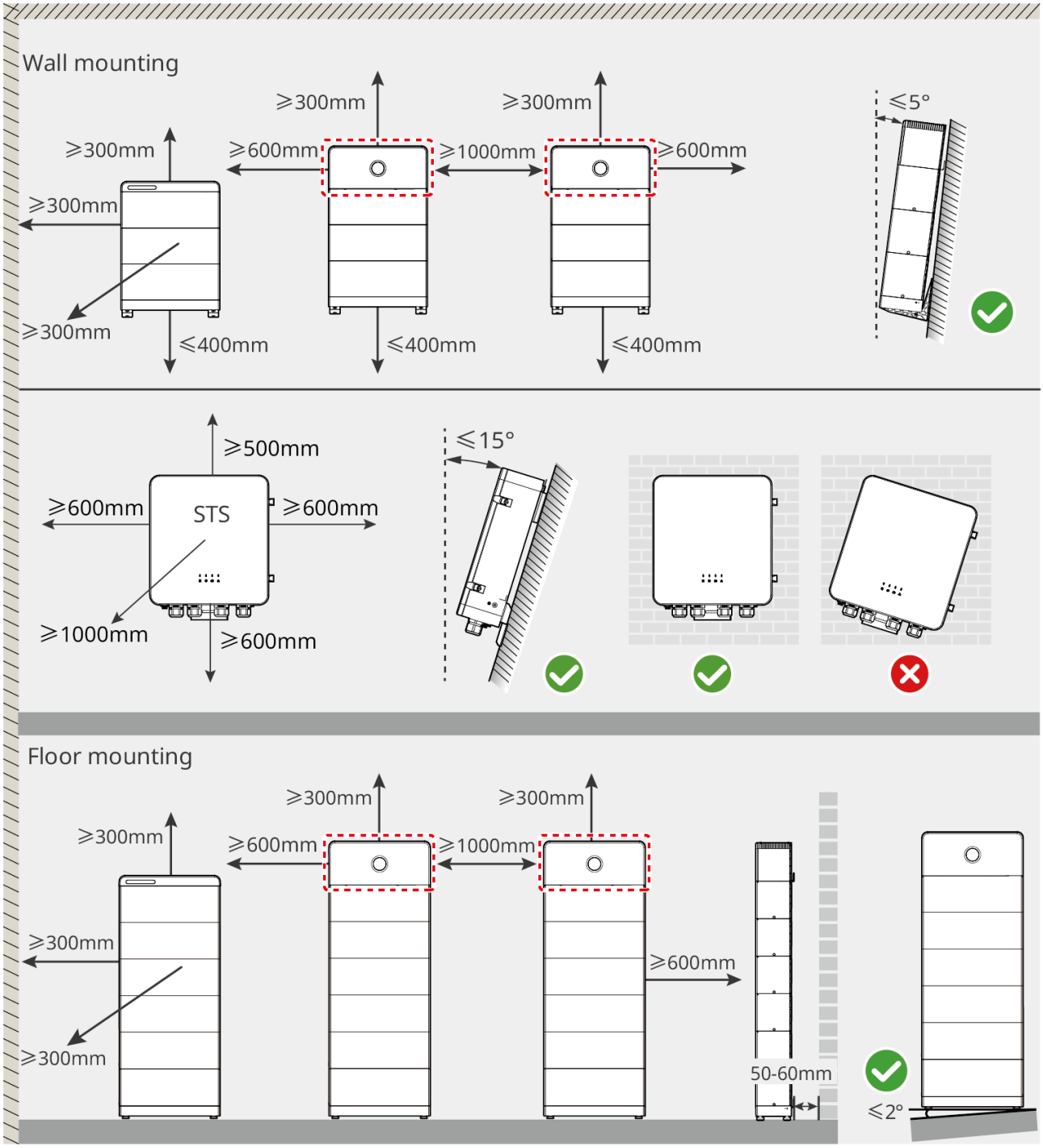

ESA20INT0018

2. **Device Communication Cable Length Requirements**

- When CAT 7E communication cables are used between inverters, the cable distance shall not exceed 10 meters; when CAT 5E or CAT 6E communication cables are used, the cable distance shall not exceed 5 meters. Do not make the communication cable longer than 10 m, otherwise communication anomalies may occur.
- For CT installation, shielded network cables of CAT 5E or higher must be used, and the cable distance shall not exceed 30 meters.
- The RS485 twisted-pair shielded cable for communication between the inverter and the electricity meter shall not exceed 100 meters in cable distance.

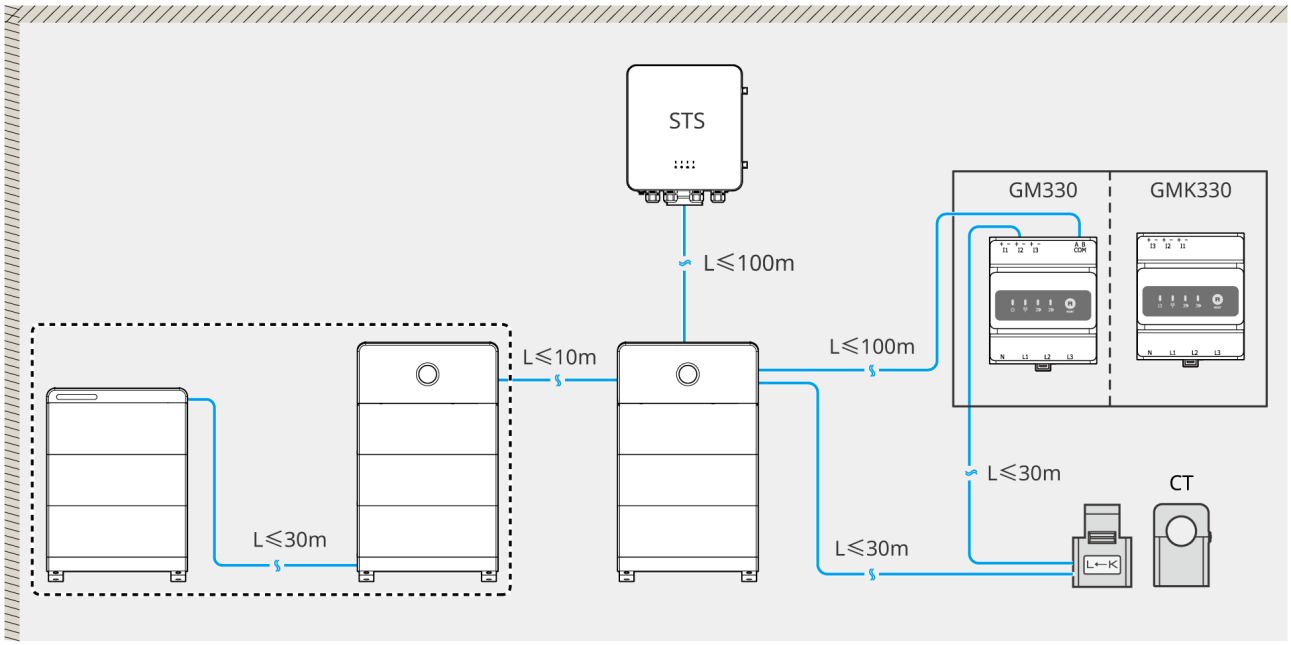

ESA20INT0012

4.1.3 Tool Requirements

NOTICE
During installation, it is recommended to use the following installation tools. If necessary, other auxiliary tools may be used on-site.

Installation Tools

Tool Type	Description	Tool Type	Description
	diagonal plier		RJ45 connector crimping tool

Tool Type	Description	Tool Type	Description
	wire stripper		Level bar
	open-end wrench	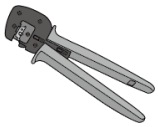	PV terminal crimping tool PV-CZM-61100
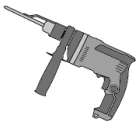	hammer drill (drill bit Φ12mm)	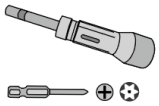	torque wrench M4, M5, M6, M10
	rubber hammer		socket wrench
	marker pen	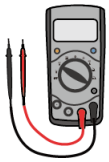	multimeter Range ≤ 1000V
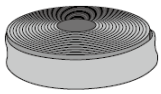	heat shrink tubing		heat gun
	cable tie		vacuum cleaner

Personal Protective Equipment

Tool Type	Description	Tool Type	Description
	Insulated gloves, protective gloves	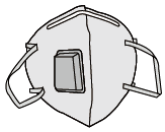	Dust mask

Tool Type	Description	Tool Type	Description
	goggle		Safety shoes

4.2 Equipment Handling

⚠CAUTION

- During transportation, handling, Installation, and other operations, it must comply with the laws, regulations, and relevant standards of the country or region where it is located.
- Before Installation, it is necessary to move Equipment Handling to Installation. To prevent personal injury or equipment damage during the transportation process, please NOTICE the following matters:
  1. Please equip the corresponding personnel according to the Weight to prevent the equipment from exceeding the Weight range that can be manually handled, thereby avoiding injury to personnel.
  2. Please wear safety gloves to avoid injury.
  3. Please ensure the equipment remains balanced during transportation to avoid falling.
  4. Battery system can be transported by hoisting to the Installation location.
  5. When lifting and moving equipment using a hoisting method, please use flexible slings or straps. The load-bearing capacity of a single strap must meet the following requirements:
     - GW5.1-BAT-D-G20，GW5.1-BAT-D-G21，GW6.0-BAT-D-G20 ⩾185KG
     - GW8.3-BAT-D-G20，GW8.3-BAT-D-G21，GW9.0-BAT-D-G20 ⩾240KG

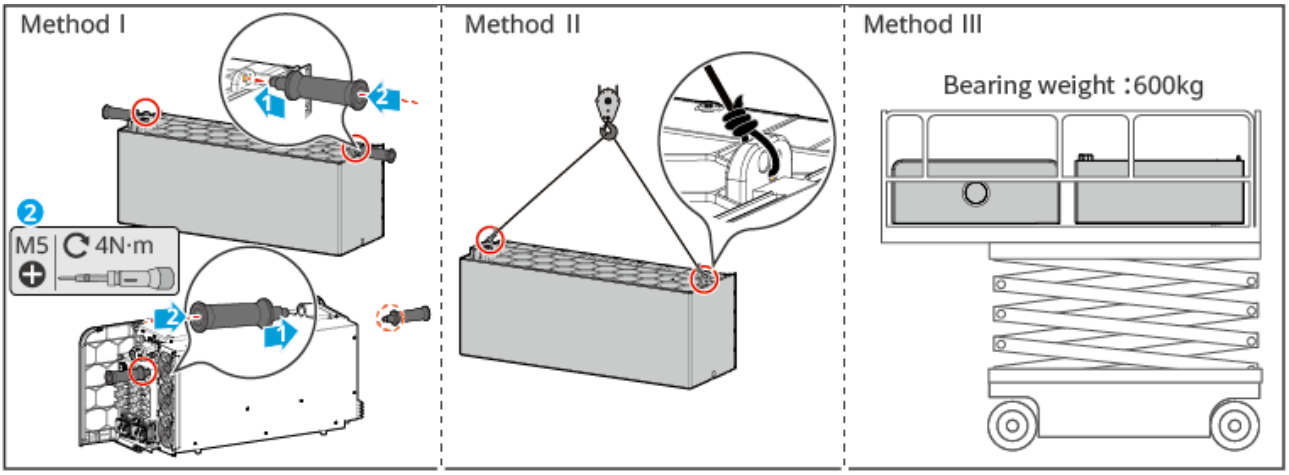

4.3 Install the Device

⚠CAUTION

- When drilling, ensure the drill position avoids water pipes, cables, etc. inside the wall to prevent danger.
- When drilling, wear safety goggles and a dust mask to avoid inhaling dust into the respiratory tract or getting it into your eyes.
- The inverter is installed above the battery; do not install the battery above the inverter.
- When installing the battery system, ensure it is installed level and securely. When placing the battery base, battery, and inverter, confirm that the upper and lower holes are aligned; the anti-tip bracket should be vertically close to the ground, wall, or battery system surface.
- When drilling with a hammer drill, use cardboard or other coverings to shield the battery system to prevent foreign objects from entering the device and causing damage.
- When mounting on a wall, be sure to evaluate the wall's load-bearing capacity to ensure the safety of your life and property.

NOTICE

- The battery must be installed on the base. The base can be installed on the floor or mounted on the mounting bracket.
- For floor installation, up to 4 batteries can be stacked away from the wall, and up to 6 batteries can be stacked against the wall.
- The maximum number of batteries that can be stacked when using a mounting bracket is described below:
  - Same energy stacking:
    - GW5.1-BAT-D-G20, GW5.1-BAT-D-G21: up to 3 batteries.
    - GW8.3-BAT-D-G20, GW8.3-BAT-D-G21: up to 2 batteries.
    - GW6.0-BAT-D-G20: up to 3 batteries.
    - GW9.0-BAT-D-G20: up to 2 batteries.
  - Mixed stacking of different energy levels:
    - When GW5.1-BAT-D-G20, GW5.1-BAT-D-G21, and GW6.0-BAT-D-G20 are mixed and stacked, each system group supports up to 3 batteries.
    - GW8.3-BAT-D-G20, GW8.3-BAT-D-G21, GW9.0-BAT-D-G20, and models stacked in mixed configurations with them, each system group supports up to 2 batteries.
- When mounted against the wall, secure the base, mounting bracket, and the top battery to the wall with anti-tip brackets.
- When marking the drilling positions for mounting bracket installation, have one person hold the base steady while another person uses a marker to mark the drilling positions.
- When installing the battery and inverter, remove the protective caps from the blind-mate connectors before stacking.

Wall-Mounted Installation

Step 1: Mount the base onto the wall-mounting bracket.

Step 2: Press the bracket firmly against the wall. Make sure the bracket is placed securely and check the bubble level at the center of the base.

Step 3: After adjusting the position and level of the bracket, use a marker to mark the drilling positions. When marking is complete, remove the bracket. (A: PACK fixing holes; B: bracket fixing holes.)

Step 4: Drill holes and install the expansion anchors.

1. Drill the holes with a hammer drill.
2. Clean the holes.
3. Use a rubber mallet to drive the expansion anchors into the holes.
4. Use a hex wrench to tighten the nuts clockwise to expand the anchors.
5. Turn the nuts counterclockwise and remove them.
6. Use a torque screwdriver to secure the anti-tip bracket to the wall.

Step 5: Use a hex wrench to secure the bracket to the wall.

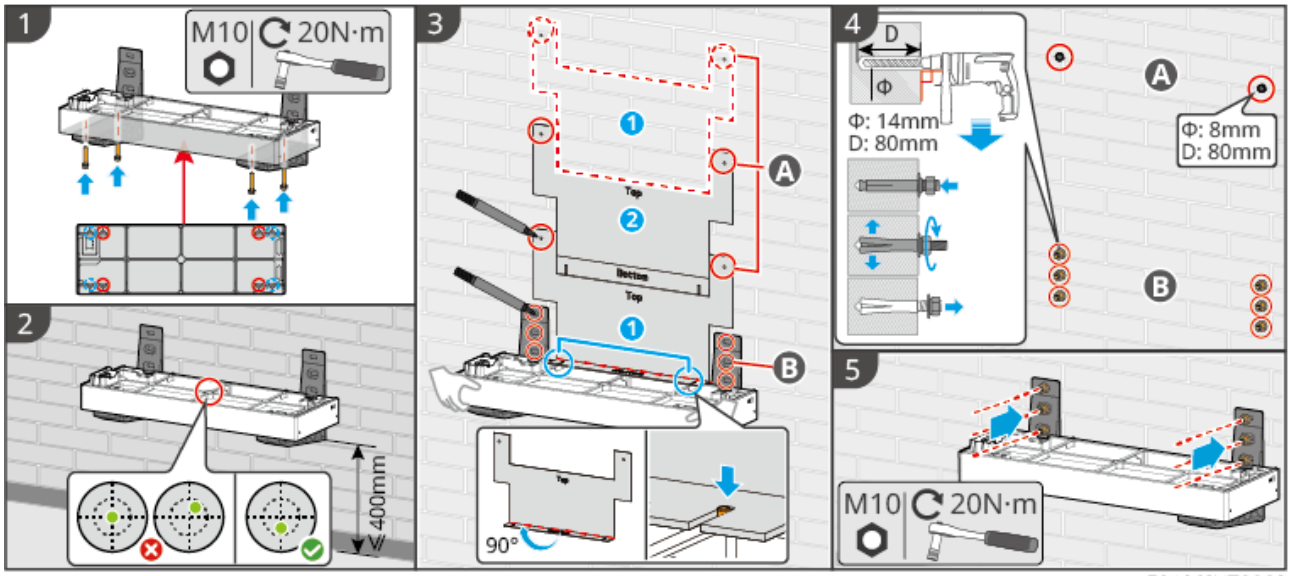

ESA20INT0003

Floor-Standing Installation

Installation Against the Wall

Step 1: Install the adjustable feet on the bottom of the base, and fix the anti-tip bracket to the base.

Step 2: Place the base 50-60mm away from the wall, keeping it parallel to the wall. Check the bubble level at the center of the base; if the bubble is not centered, use the adjustable feet to level it.

Step 3: After adjusting the position and level of the base, use the drilling template to mark the drilling positions. When marking is complete, remove the base. (A: PACK fixing holes; B: bracket fixing holes.)

Step 4: Drill the holes with a hammer drill and clean the holes.

Step 5: Use a Phillips screwdriver to secure the anti-tip bracket to the wall.

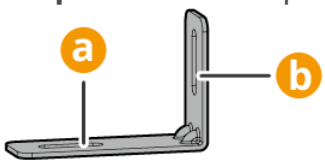

a: surface fixed to the base; b: surface fixed to the wall.

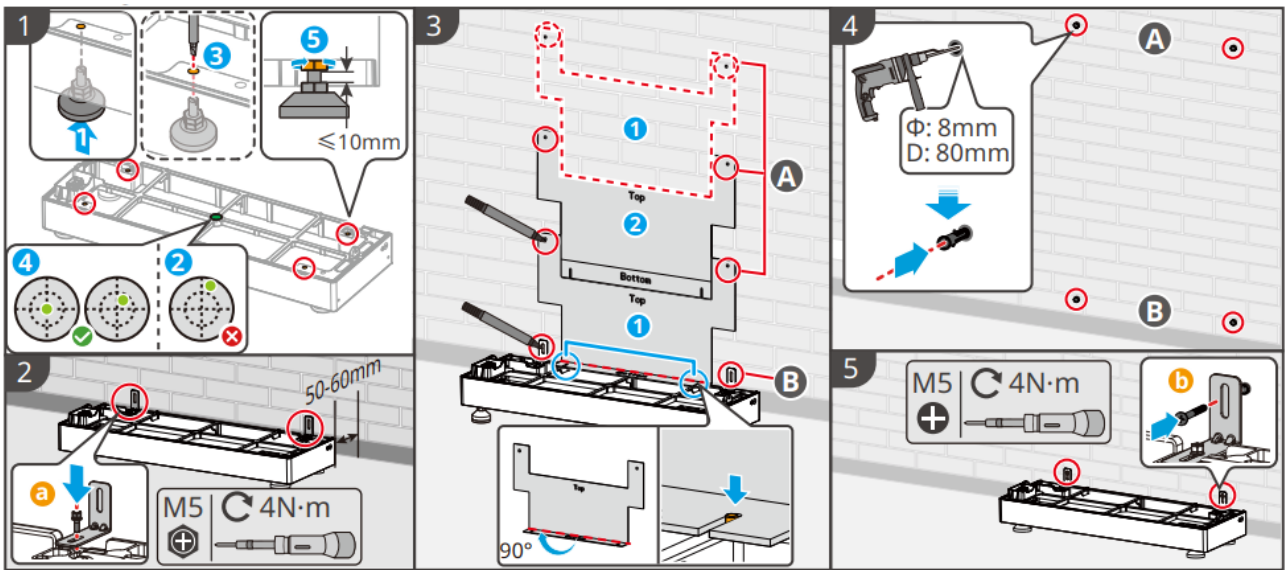

Installation Away from the Wall

Step 1: Install the adjustable feet on the bottom of the base. Check the bubble level at the center of the base; if the bubble is not centered, use the adjustable feet to level it.

Step 2: After adjusting the position and level of the base, fix the away-from-wall bracket to the base. Select a suitable position and mark the drilling positions. When marking is complete, remove the base.

Step 3: Drill holes and install the expansion anchors.

1. Drill the holes with a hammer drill.
2. Clean the holes.
3. Use a rubber mallet to drive the expansion anchors into the holes.
4. Use a hex wrench to tighten the nuts clockwise to expand the anchors.
5. Turn the nuts counterclockwise and remove them.
6. Use a torque screwdriver to secure the away-from-wall bracket to the floor.

Step 4: Use a hex wrench to secure the base to the floor.

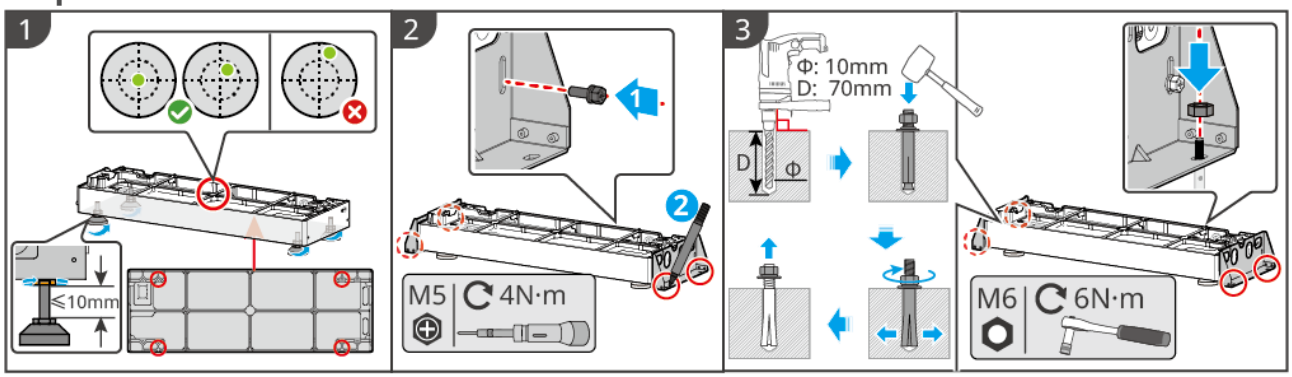

ESA20INT0015

Install the Batteries and Inverter

NOTICE
When installing against a wall, the topmost battery must be secured to the wall with an anti-tip bracket.

Step 1: Remove the protective covers on the blind-mate connectors at the bottom of the inverter or battery.
Step 2: Install the handle (optional) and stack the battery onto the base.
If more than 3 batteries are to be installed, use a lifting tool.
Step 3: Tighten the screws between the battery and the base, or between batteries.
To install multiple batteries, repeat **Step1** and **Step2** until all batteries are installed.
The number of stacked batteries must comply with the "2.2.1.System Overall Configuration Description(Page 46)".
Step 4: (Optional) Secure the top battery to the wall using the anti-tip bracket.
Step 5: Install the inverter or the battery trim cover.

- Integrated installation: Lift the inverter, align it, and stack it on top of the battery. Tighten the screws between the inverter and the battery. If the system has an integrated configuration, installation is complete at this point.
- Split-type expansion: Repeat the battery installation steps. After completing the electrical connections, place the battery trim cover on top of the battery and tighten the side screws.

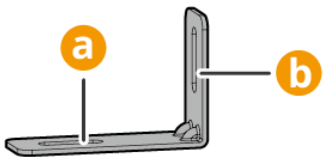

a: surface fixed to the PACK; b: surface fixed to the wall.

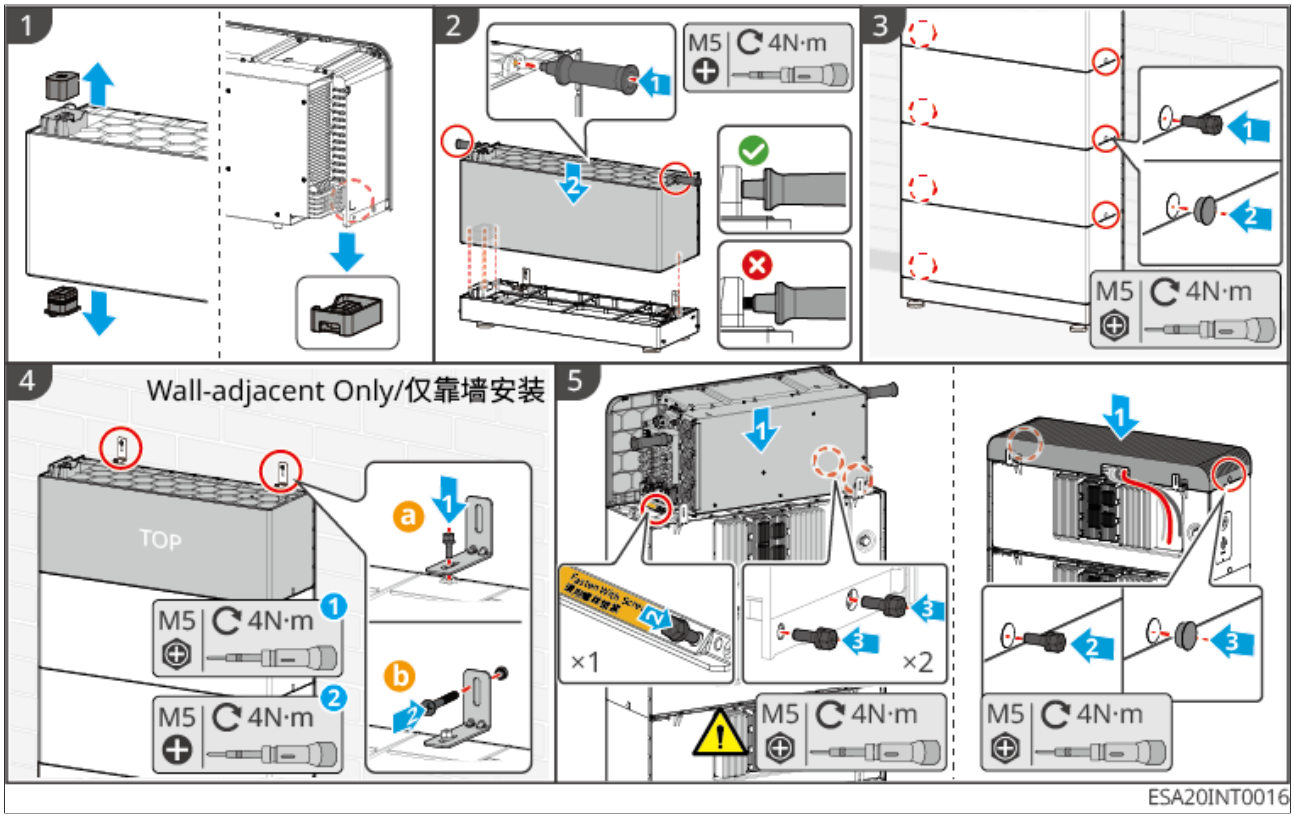

4.4 Install STS

⚠Caution

- When drilling, ensure the drilling position avoids water pipes, cables, etc., inside the wall to prevent hazards.
- When drilling, wear safety goggles and a dust mask to avoid inhaling dust or getting it into your eyes.
- When performing wall-mounted installation, to ensure your life and property safety, please make sure to evaluate the load-bearing capacity of the wall.
- Ensure the equipment is securely installed to prevent falling and injuring personnel.

1. Place the backplate horizontally on the wall surface, and use a marker pen to mark the drilling positions.
2. Use an impact drill to drill holes.
3. Secure the back plate to the wall with expansion bolts.

4. Mount the STS on the backplate.
5. Install anti-the ft lock.
6. Secure the mounting bracket to the wall using M6 screws.

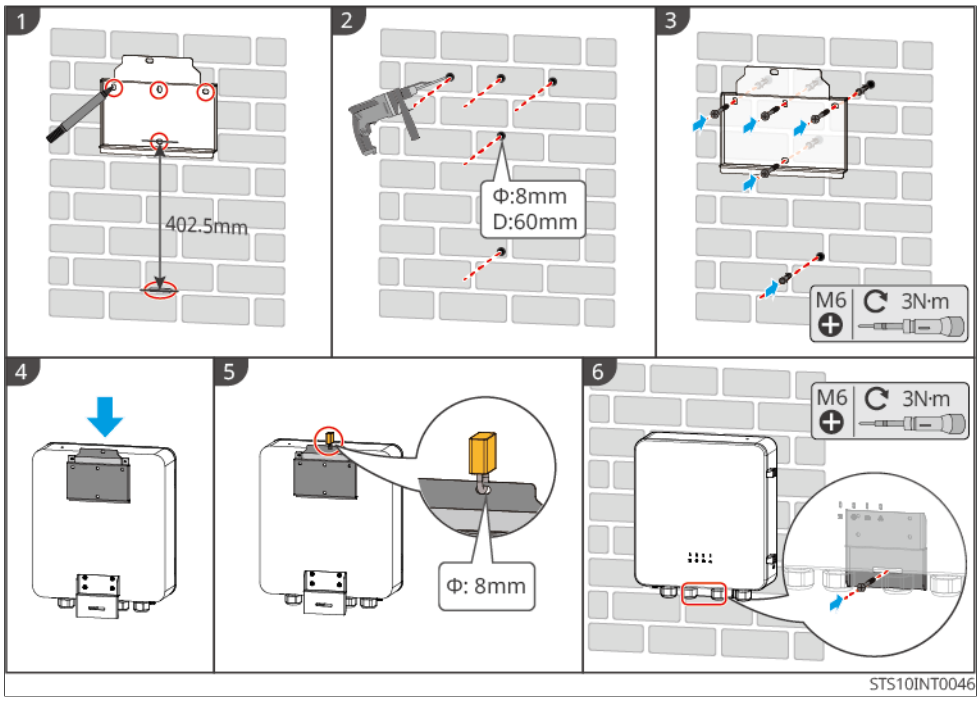

4.5 Installing the Smart Meter

⚠WARNING
In areas with lightning DANGER, if the meter cable length exceeds 10m and the cable is not routed with grounding Steel conduit, it is recommended to install external lightning protection devices.

GM330&GMK330

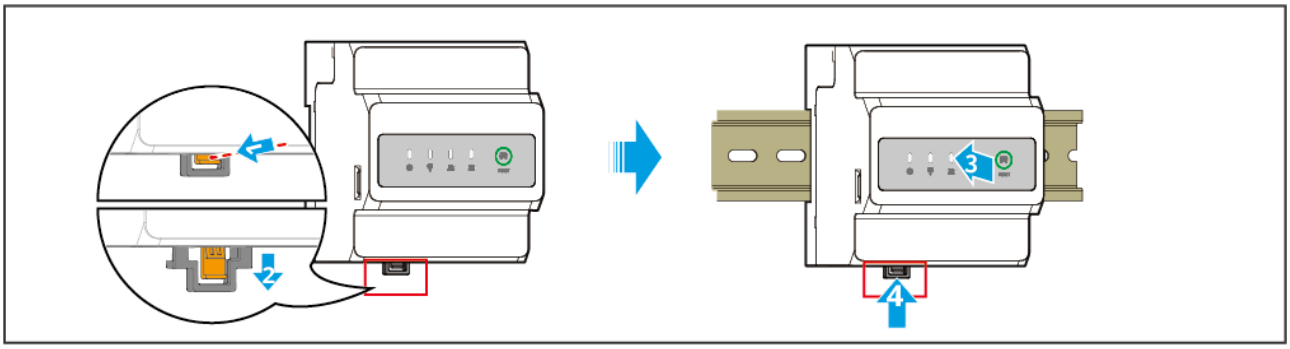

GMK10INT0003

Step 1: Pull out the buckle at the bottom of the electricity meter.

Step 2: Place the meter on the positioning track and reinstall the buckle onto the meter.

5 system wiring

⚠Danger

- The installation, routing, and connection of cables must comply with local laws, regulations, and code requirements.
- All operations, cables, and component specifications used during the electrical connection process must comply with local laws and regulations.
- Before making electrical connections, disconnect the device's DC Switch and AC output switch to ensure the device is disconnected from power. Never perform operations while energized, otherwise risks such as electric shock may occur.
- Cables of the same type should be bundled together and routed separately from cables of different types. Intertwining or crossing between the m is prohibited.
- If the cable is subjected to excessive tension, it may lead to poor connection. When wiring, please leave a certain length of slack before connecting to the inverter terminal block.
- When crimping the terminal, ensure that the cable conductor is fully in contact with the terminal. Do not crimp the cable insulation together with the terminal, as this may cause the equipment to fail to operate, or generate heat due to unreliable connections after operation, potentially damaging the inverter terminal block.
- This inverter has not been tested and verified in accordance with the AS/NZS 4777.2:2020 standard for multi-phase inverter combinations, the refore such combination schemes should not be adopted.
- For unused cable entry holes and ports (including communication ports), please use the dedicated terminals or plugs provided in the box accessories to reliably seal the m. Otherwise, the following risks may occur:
  - Electric shock hazard: Open electrical ports may cause direct contact with live parts, leading to electric shock accidents.
  - Protection failure: Open ports allow ingress of dust, moisture, or for eign objects, which may cause short circuits, fire, or equipment malfunction.

Note

- When performing electrical connections, please wear personal protective equipment such as safety shoes, protective gloves, and insulating gloves as required.
- Only qualified personnel are allowed to perform electrical connection operations.
- The cable colors in the graphics of this document are for reference only, and specific cable specifications must comply with local regulatory requirements.
- Static Transfer Switch Cabinet (STS) is an optional component applicable only to system standalone scenarios. If required, refer to the wiring method below for connection.

5.1 System Wiring and Electrical Block Diagram

Note
• According to the regulatory requirements of different regions, the wiring methods of N and PE wires for the GRID and BACK-UP ports of the inverter vary, and the specific wiring shall follow local regulations. • The inverter has a built-in meter and can be directly connected to the CT for use. The CT cable shipped with the unit is 10 meters. If a longer distance is required, a CAT5e or higher shielded cable can be used to extend the connection up to 30 meters. • CT connection length to inverter exceeding 30m will reduce accuracy. For high accuracy requirements, an external smart meter can be connected. • The built-in relay of the inverter's GRID AC port is in the open state when the inverter is in off-grid mode, and in the closed state when the inverter is in grid-connected mode. • When the inverter is powered on, the BACK-UP AC port becomes energized. If maintenance on the BACK-UP load is required, please power off the inverter; otherwise, it may cause electric shock. • In an all-home backup scenario, if the total power of connected loads exceeds 1.1 times the inverter's Rated Power, after a grid outage, the inverter will stop outputting due to Over load Protection. At this point, please shut down some non-essential loads to ensure that the total power of loads is less than 1.1 times the inverter's Rated Power.

Neutral and PE wires are connected together in the distribution box

Note
• To maintain neutral integrity, the neutral wires of the grid-tied side and off-grid side must be connected together; otherwise, the off-grid function cannot operate normally. • The following diagram shows a schematic of the power grid system for regions such as Australia and New Zealand:

Type 1:
Whole house backup power

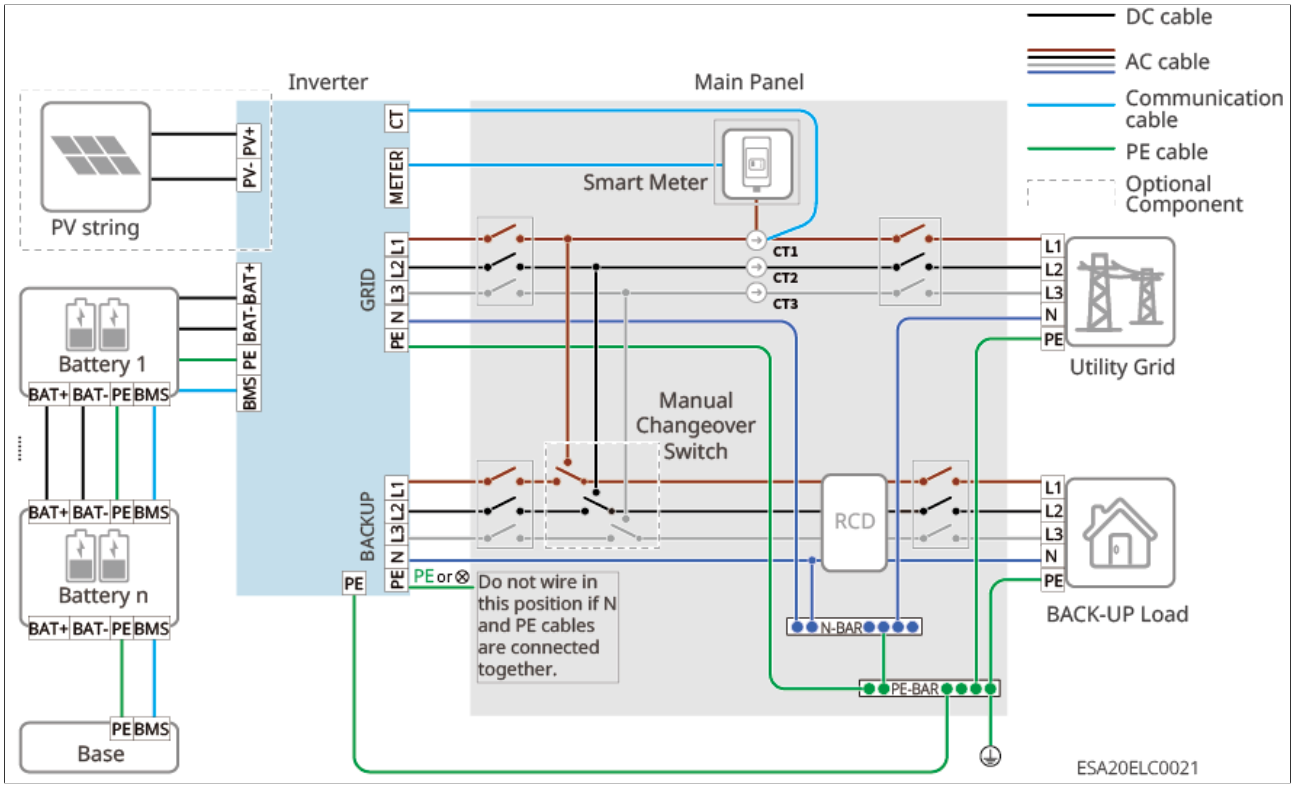

Figure17 Whole house backup power

Partial backup power

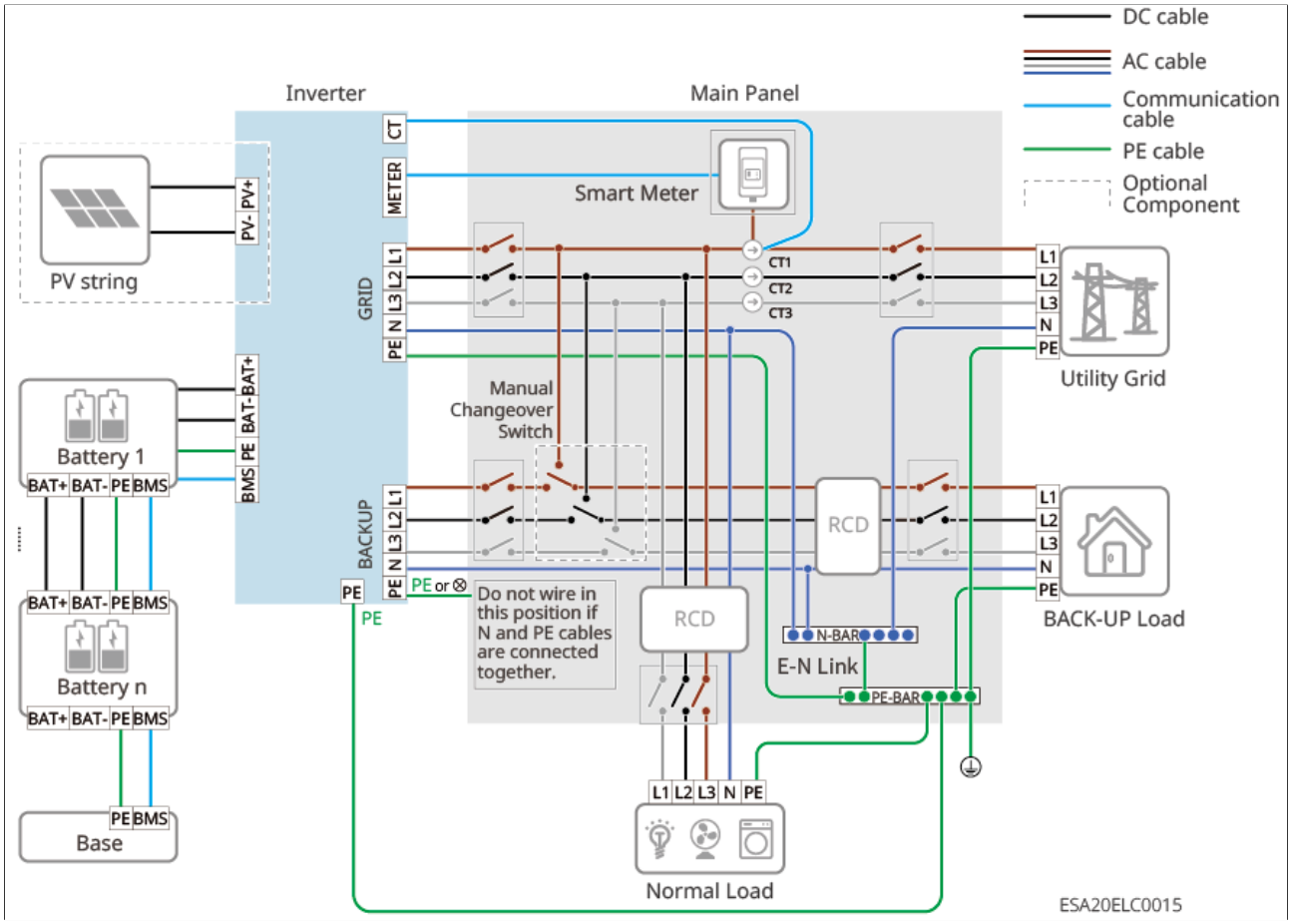

Figure18 Partial backup power

Type 2

Whole house backup power

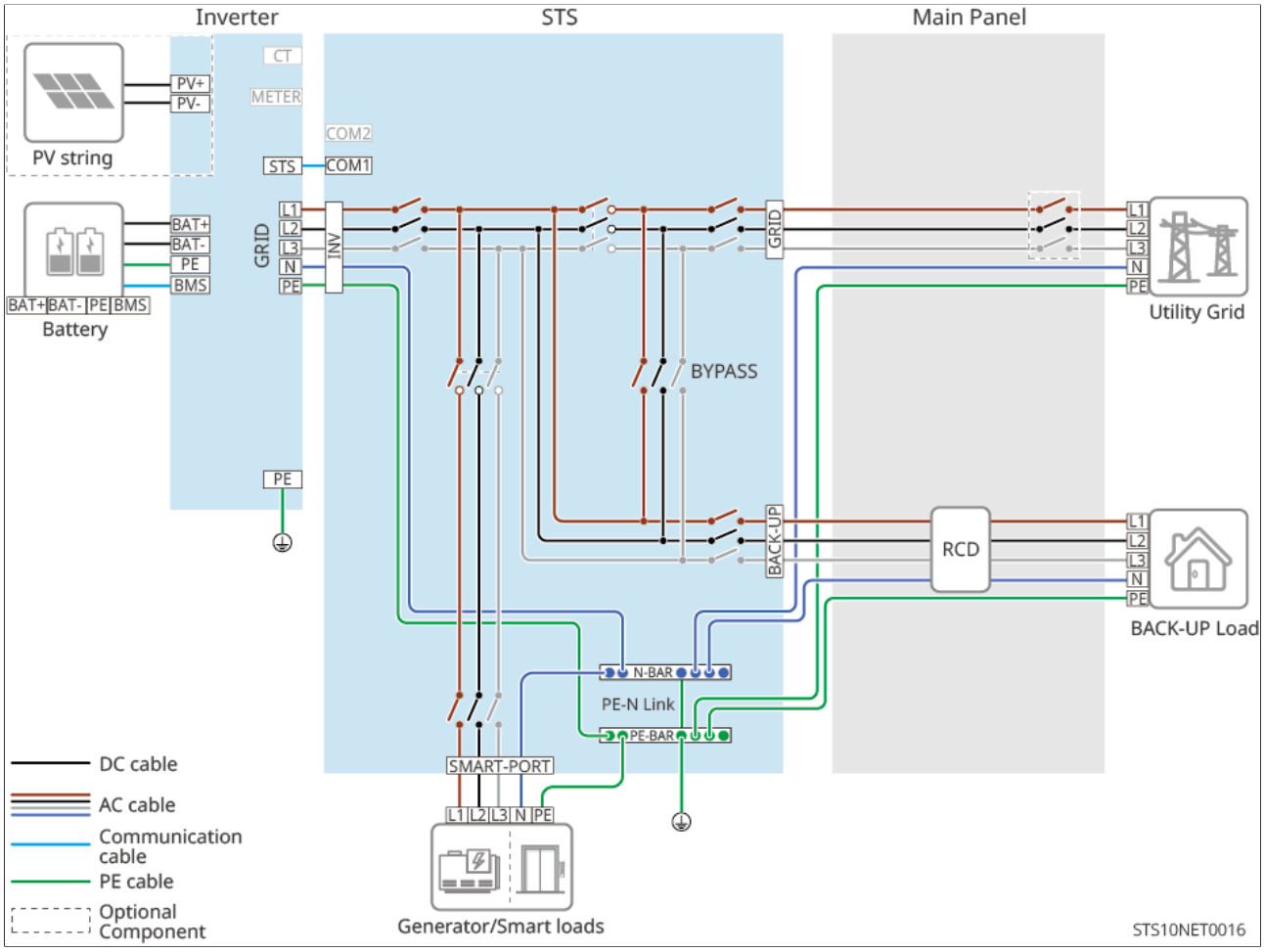

Figure19 with STS whole-house backup power

Partial backup power

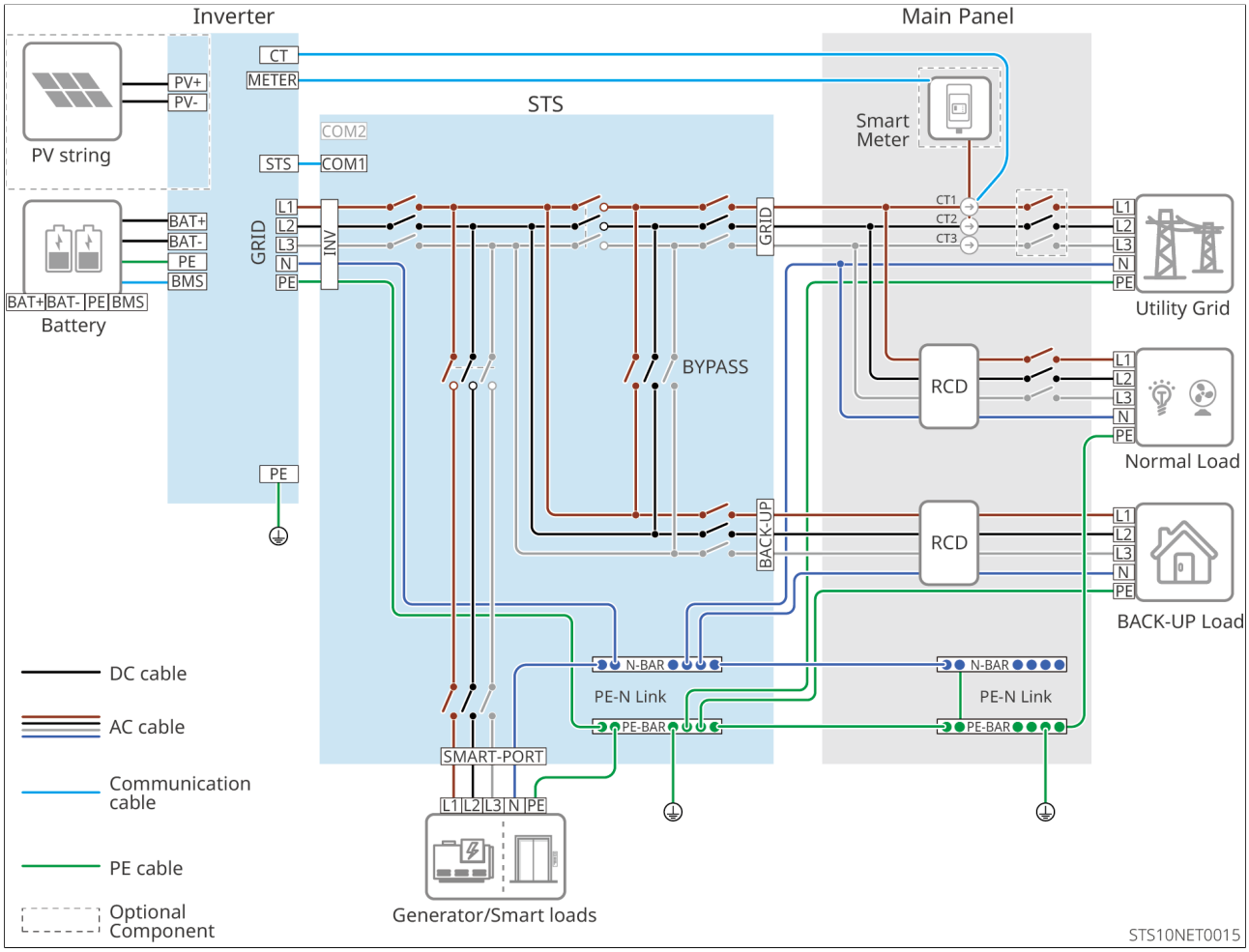

Figure20 with partial backup power for STS

N and PE wires are connected separately in the distribution box

Note

- Please ensure that the Protection ground wire of BACK-UP is correctly and securely connected; otherwise, abnormal operation of the BACK-UP function may occur during a grid fault.
- In a parallel system, do not install Residual Current Protection Devices (RCDs) on the grid-connected branches of each inverter. RCDs should be uniformly installed at the grid summary point.
- Regions other than Australia, New Zealand, etc. are applicable to the following wiring method:

Type I:

Whole house backup power

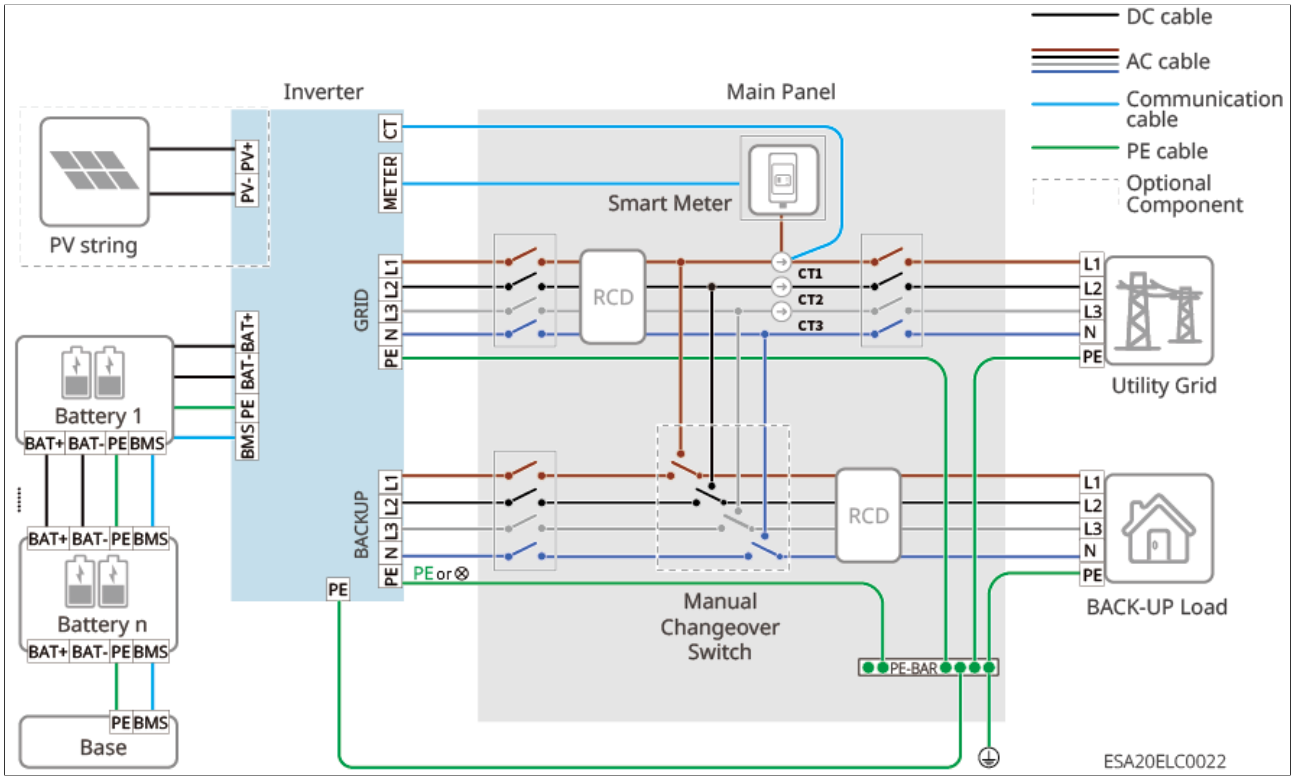

Figure21 Whole house backup power

Partial backup power

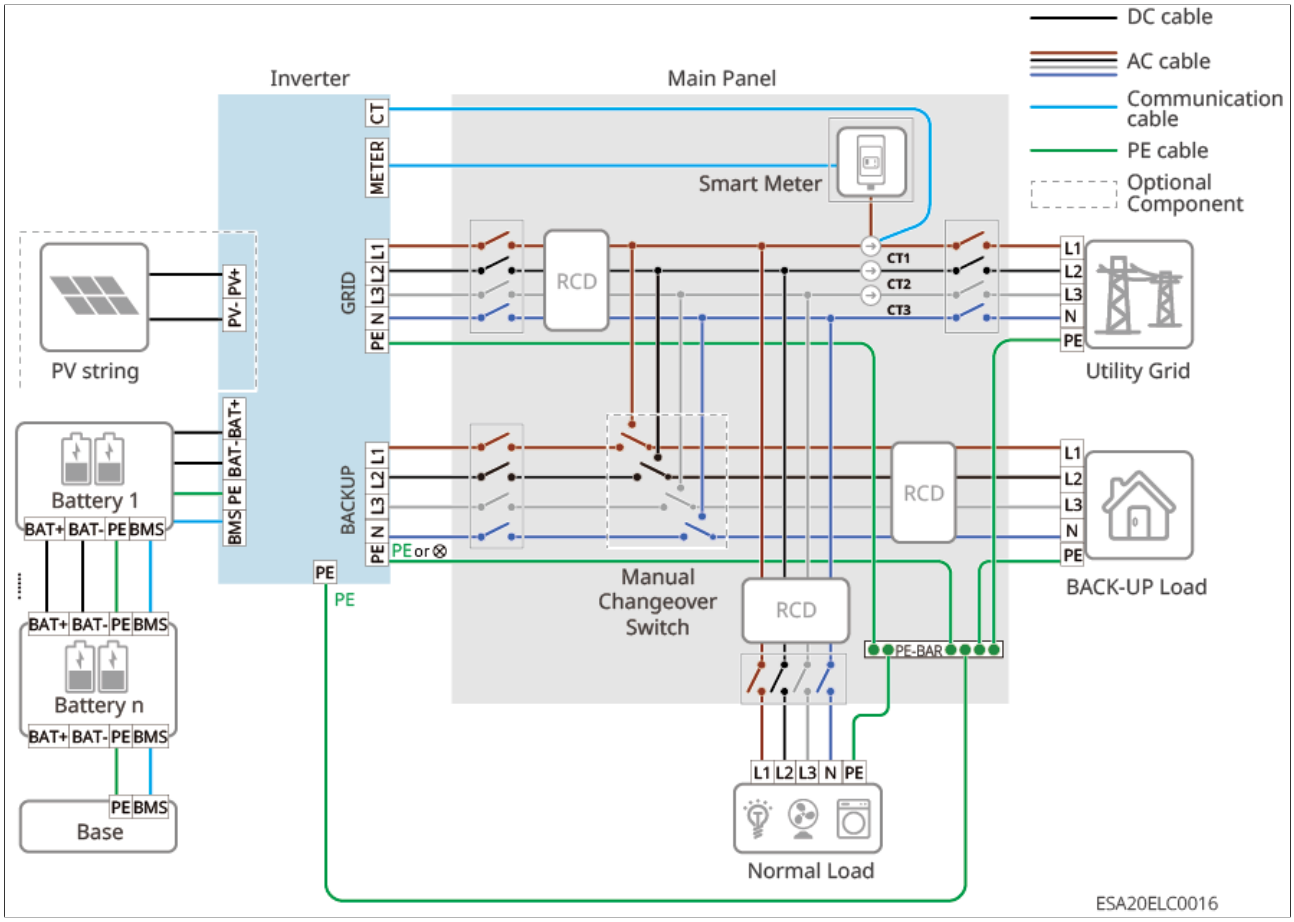

Figure22 Partial backup power

Type 2:

Note
If the inverter does not need to connect the N and PE wires when switching to off-grid mode, this function can be set via the "Backup Power N and PE Relay Switch" in the "Advanced Settings" interface of the App. The following wiring method is applicable to regions other than Australia, New Zealand, etc.:

Whole house backup power

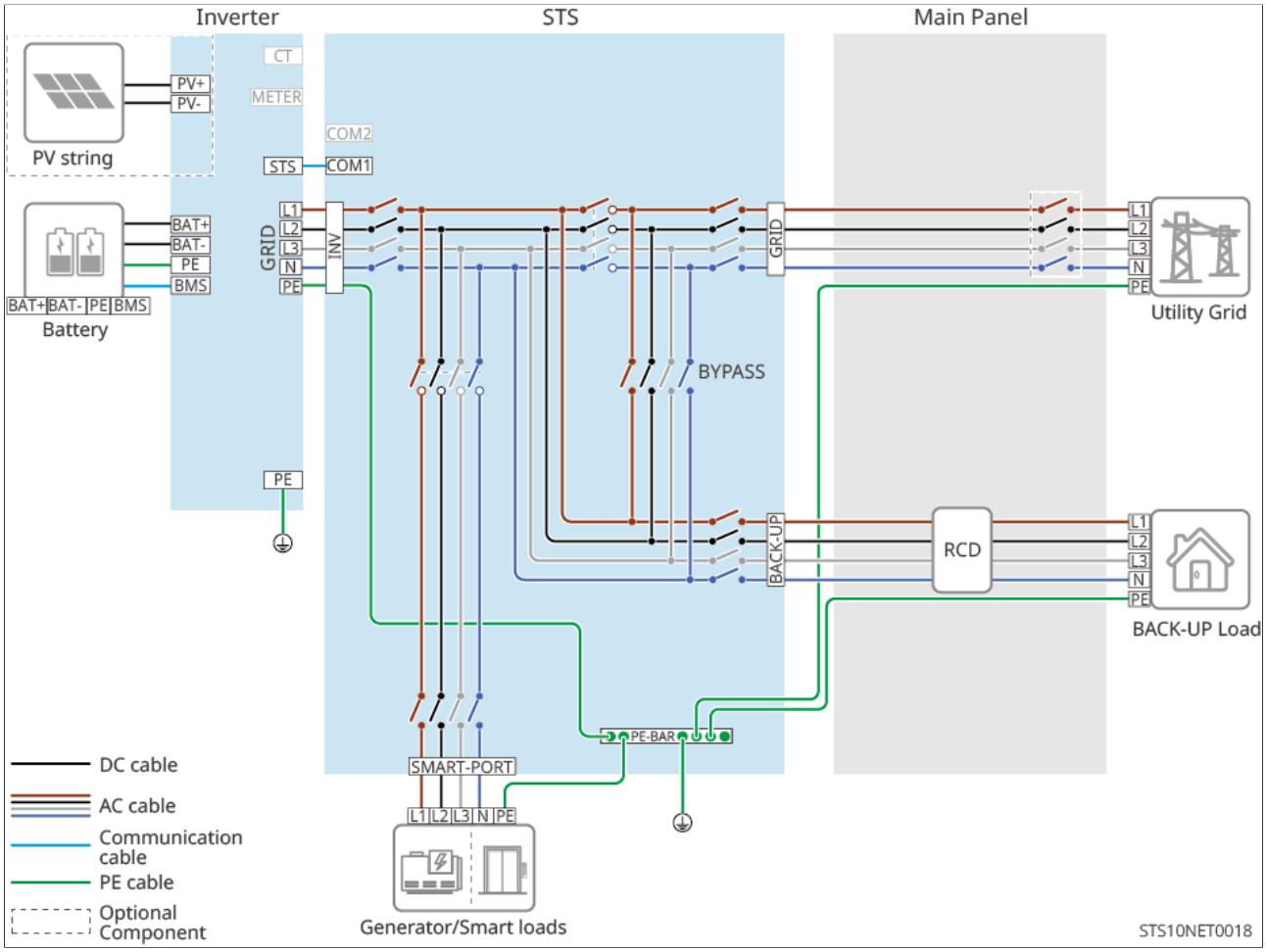

Figure23 with STS whole-house backup power

Partial backup power

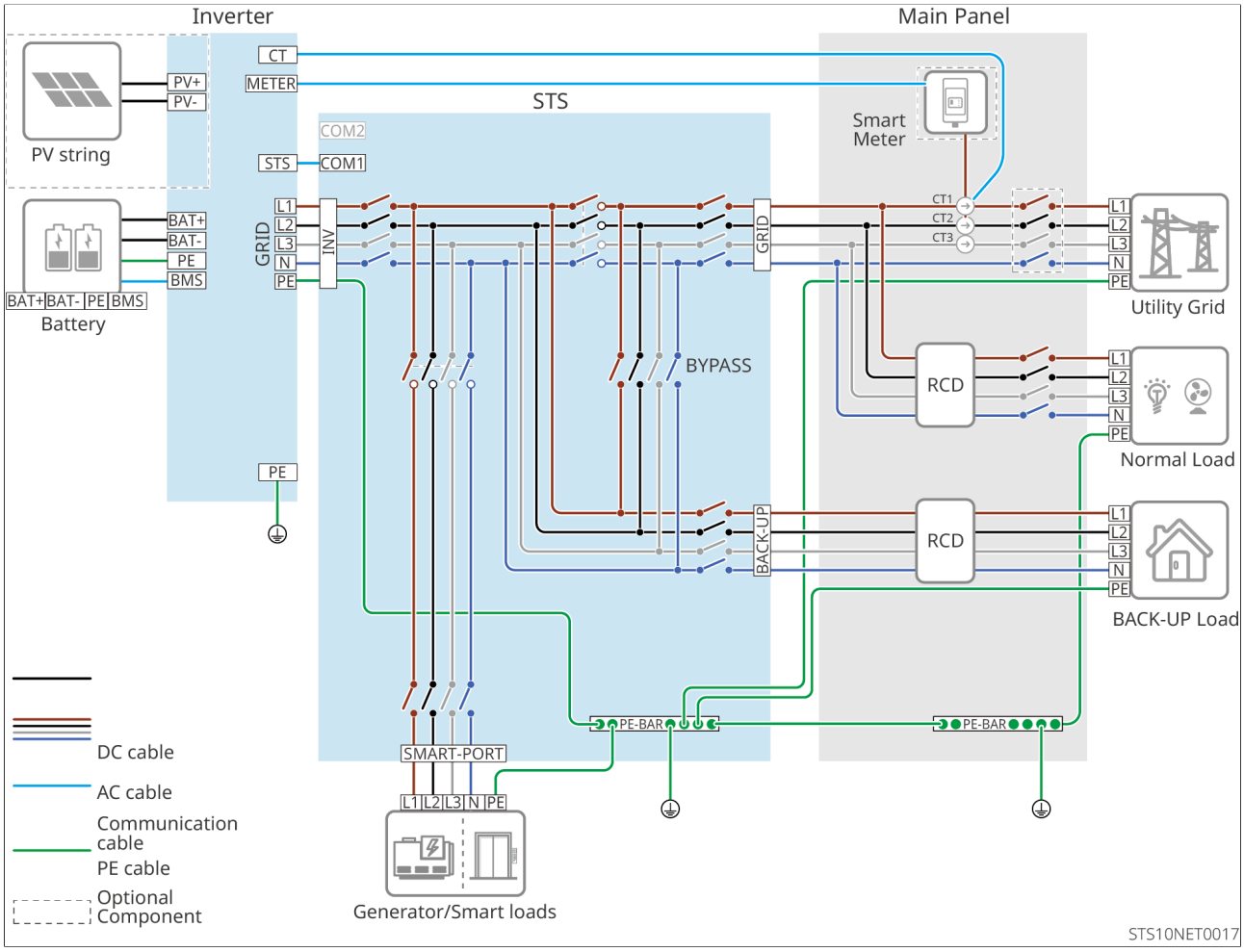

Figure24 with partial backup power for STS

5.2 STS Pre-Wiring Preparation

- **Cabinet door**

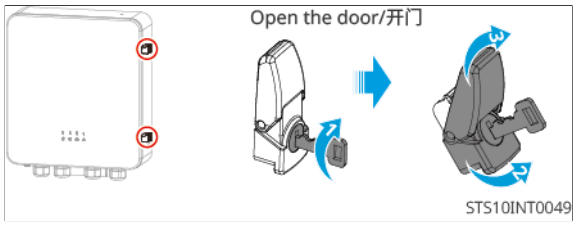

- **Gland operation**

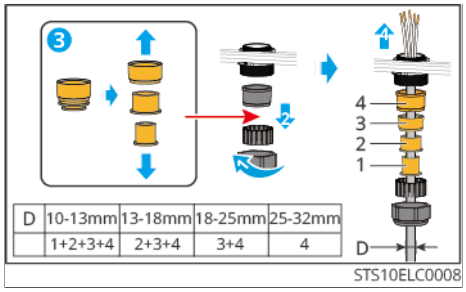

- **Cover plate operation**

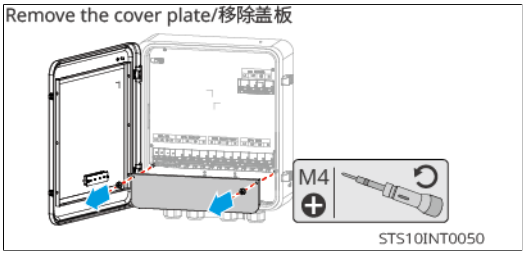

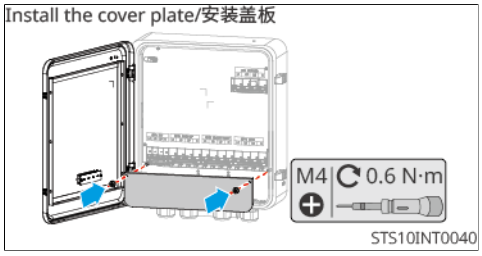

- **Wiring schematic**

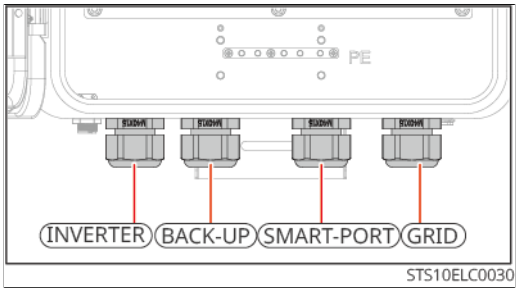

5.3 System Wiring Detail Drawing

When all loads in the photovoltaic system cannot consume the Energy Generation produced with in the system, the surplus Energy Generation will be fed into the grid. In this case, a smart meter or CT can be used to monitor the system's Energy

Generation and control the Energy Generation fed into the grid.

- Connect to smart meter to enable output power limitation and load monitoring functions.
- After connecting the smart meter, please enable the "Grid Power Limitation" function through the SEMS+ App.

In the system wiring detail drawing, only some models of equipment are shown for wiring illustration. Please refer to the corresponding wiring instruction chapter based on the actual equipment used for wiring.

⚠Warning

The common contact of the manual transfer switch must be on the BACK-UP load side of the inverter, and should not be connected to the GRID grid side. If connected to the GRID grid side, the inverter will operate in off-grid mode and bypass mode simultaneously. When the grid power fails, the distribution cabinet connected to the inverter's GRID port will still have high voltage, which may pose a risk of electric shock.

Australia region

Note

In Australia, a 3-pole manual transfer switch is included with the product upon shipment. If needed, please wire it according to the wiring method for the 3-pole manual transfer switch shown in the wiring diagram below.

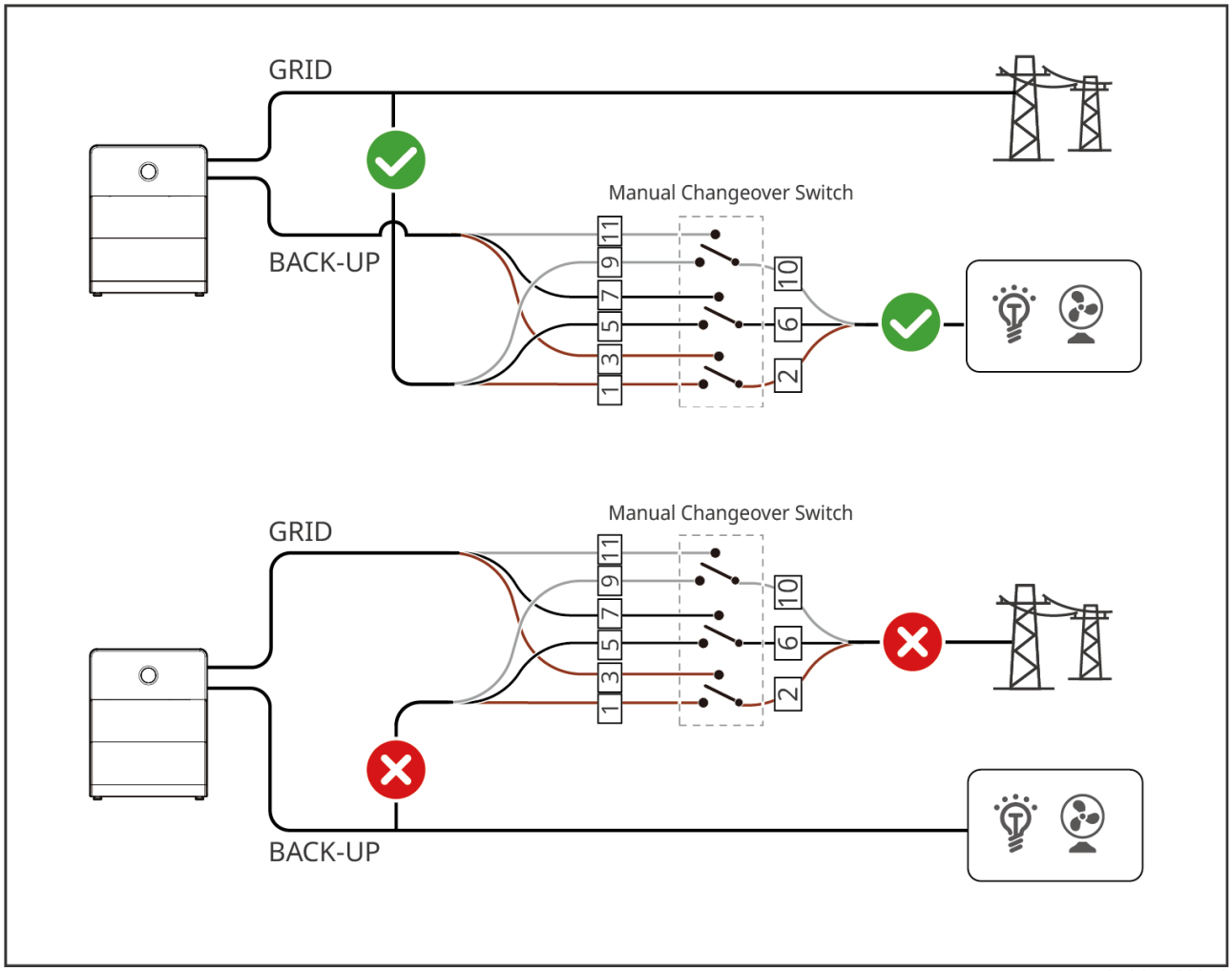

ESA20ELC0019

European region

Note
In Europe, if a manual transfer switch is required, please purchase a 4-pole manual transfer switch through a dealer or procure it yourself. After obtaining the switch, proceed with wiring according to the wiring method for the 4-pole manual transfer switch shown in the wiring diagram below.

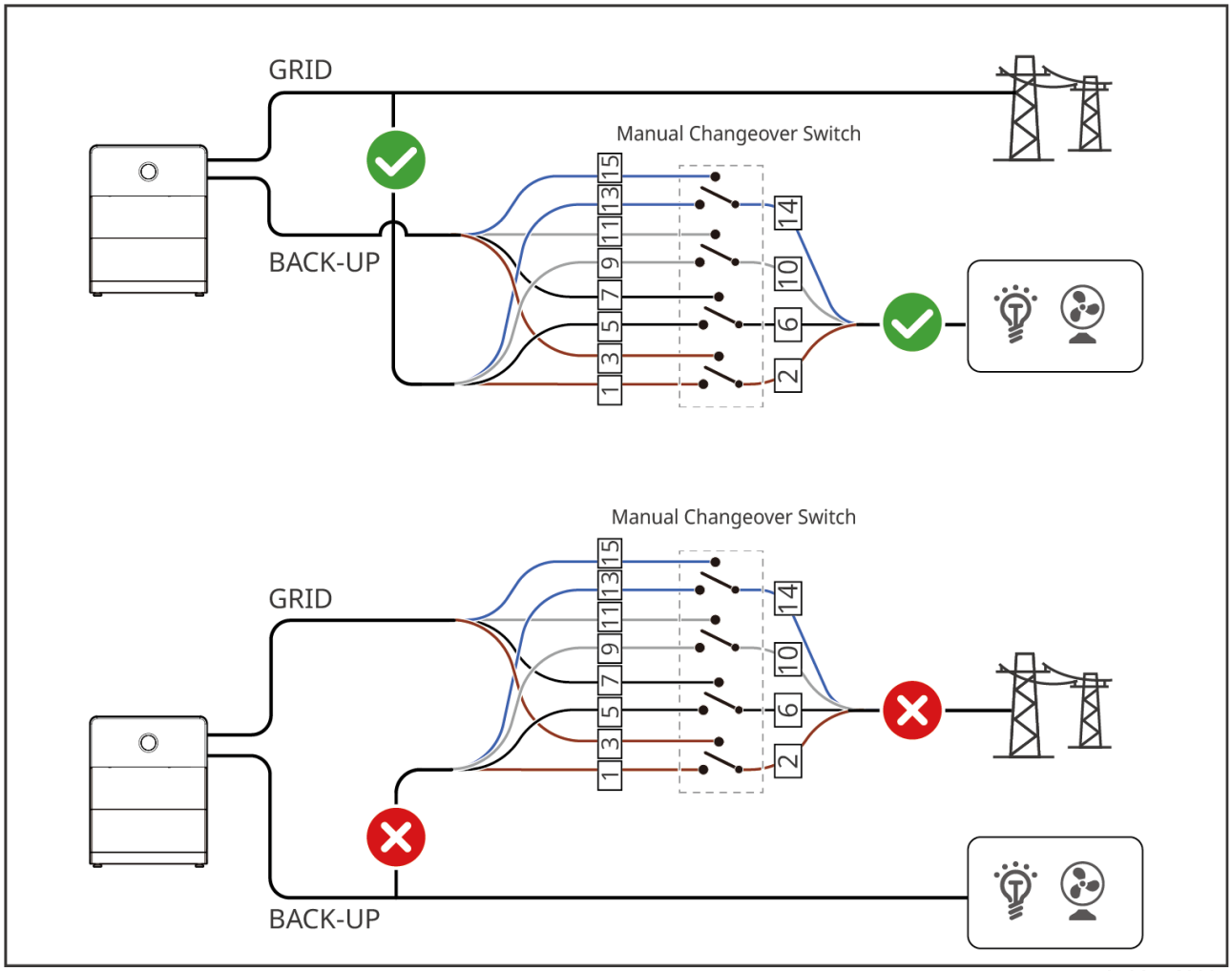

ESA20ELC0035

Note

- Different wiring methods for electric meters vary; please refer to the actual meter.
- When not using the inverter's built-in meter, do not connect the inverter's CT port.
- In the whole-house backup power scenario, the re is no need to connect additional meters or CTs. Simply set the "Meter Type" to "Built-in CT, External No Meter No CT" in the App to achieve the Power Limit function.
- Manual transfer switch and STS are only applicable to single inverter scenarios. Please choose whether to install them based on actual operating conditions. Configure only one of them, do not install both.
- If the system needs to use a generator, please follow the following requirements.

Note

- When the system is not configured with STS, the generator is connected to the inverter GRID port, and an external meter must be used. If an ATS switch is provided, it must have interlocking functionality.
- When the system is configured with STS, the generator connects to the STS Smart-Port with out requiring an external meter.

- If the system requires inverter parallel networking, please note the following:
  - The inverter's built-in meter supports system Parallel Networking. If the number of parallel inverters exceeds 2, or the wire diameter or range of the standard CT does not meet the total current requirement of the parallel inverters on site, please use the GM330 smart meter.
  - In a parallel system, the DIP switches of the first and last inverters must be set to the ON position, while the other inverters should be set to the OFF position.
  - In the parallel system, the inverter connected to the meter is the master inverter, and the others are slave inverters.
  - The master inverter needs to be set as the master through the App "Set RS485 parallel operation". The slave inverter also needs to be set as the slave. For specific operation steps, please refer to the App user manual.
  - In a parallel system, if it is necessary to connect DRED devices, RCR devices, Remote Shutdown devices, SG Ready heat pumps, etc., please connect to the master inverter.
  - Remote Shutdown function: connect the communication cable to the main inverter. Quick Shutdown function: connect the communication cable to each inverter separately. If both Quick Shutdown and Remote Shutdown functions are needed, please contact after-sales service center.
  - In a parallel system, each inverter needs to be equipped with a WiFi/LAN Kit-20.
  - The parallel system supports generator connection. If a generator needs to be connected, ensure that:
    - Generator power must be greater than the total power of all loads on the BACKUP port.
    - The current capacity of the matching ATS can meet the total current demand when all inverters output at Rated Power simultaneously.
  - In a parallel system, if it is necessary to disconnect any port circuit breaker of a certain inverter, please synchronously disconnect the other port circuit breakers of this inverter; otherwise, it may cause abnormal system operation.
  - Microgrid Scenario does not support parallel operation of energy storage

Note

inverters.

- In microgrid and coupling scenarios, if grid-tied inverter power generation monitoring and load monitoring functions need to be realized, dual-meter networking is required.
  - Meter 1 or the built-in meter is used to monitor the grid-connected power of the system.
  - Meter 2 is used to monitor the power generation of the grid-connected inverter.
  - By integrating data from meter 1 and meter 2, the monitoring platform can achieve real-time monitoring of load power consumption.
  - The dual-meter combination scheme for microgrid and coupling scenarios is shown in the table below "Dual-Meter Configuration Scheme". The connection method of the meter between the grid side and the AC side of the grid-tied inverter does not vary with different meter models.
  - If the grid-tied inverter requires output power limitation, please connect a meter or CT etc. separately.

Dual Meter Configuration	
Meter 1 (Grid Side)	Meter 2 (AC side of grid-tied inverter)
built-in electric meter	GMK330
built-in electric meter	GM330
GMK330	GMK330
GM330	GM330
GMK330	GM330
GM330	GMK330

5.3.1 General scenario

Detailed Wiring Diagram of Single Inverter System

- Manual transfer switch is optional. Please decide whether to install it based on the

actual application scenario.

In the whole-house backup power scenario, built-in CT networking.

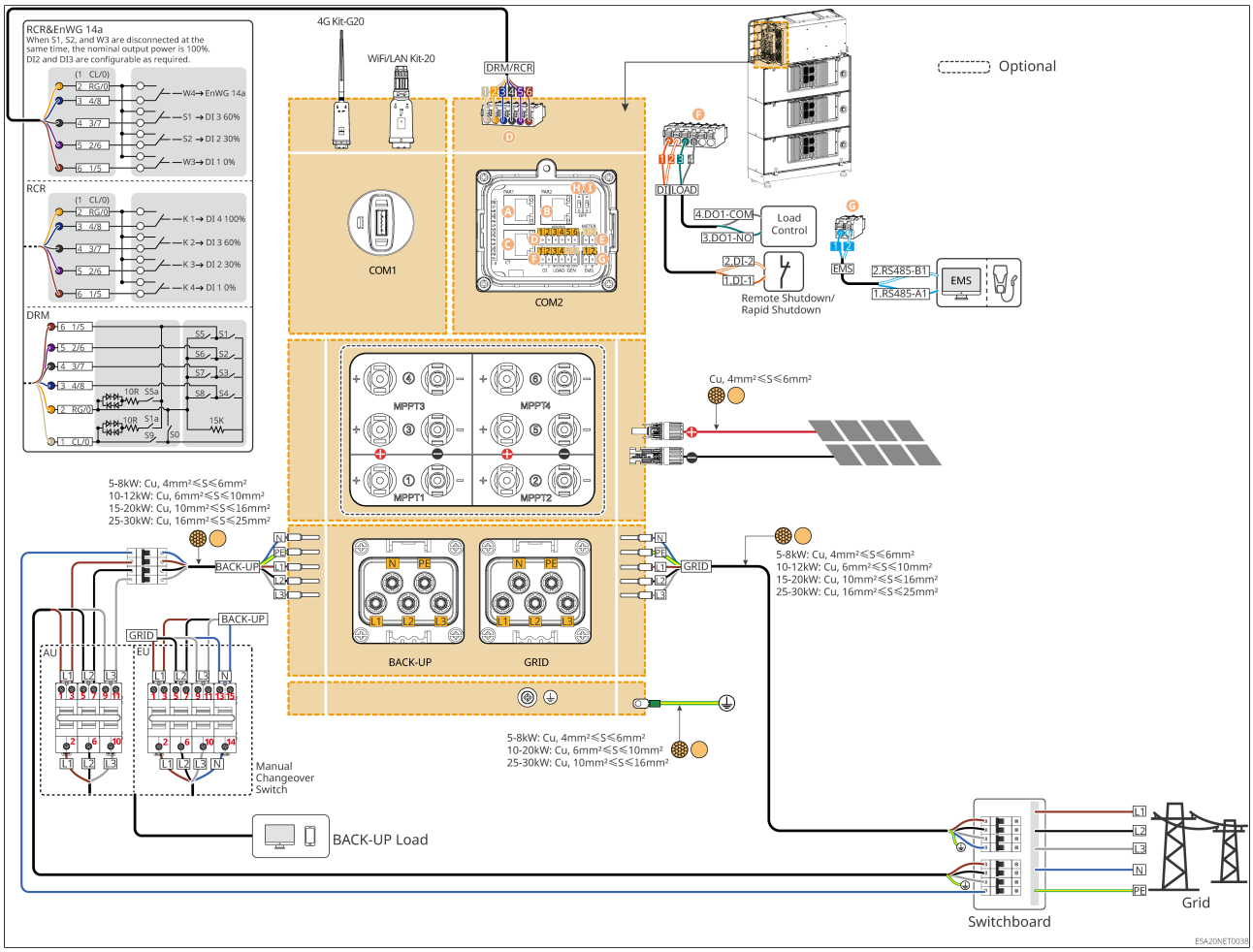

Figure25 General Scenario 1: Whole-House Backup Power Built-in CT Networking Diagram

Networking with built-in meter

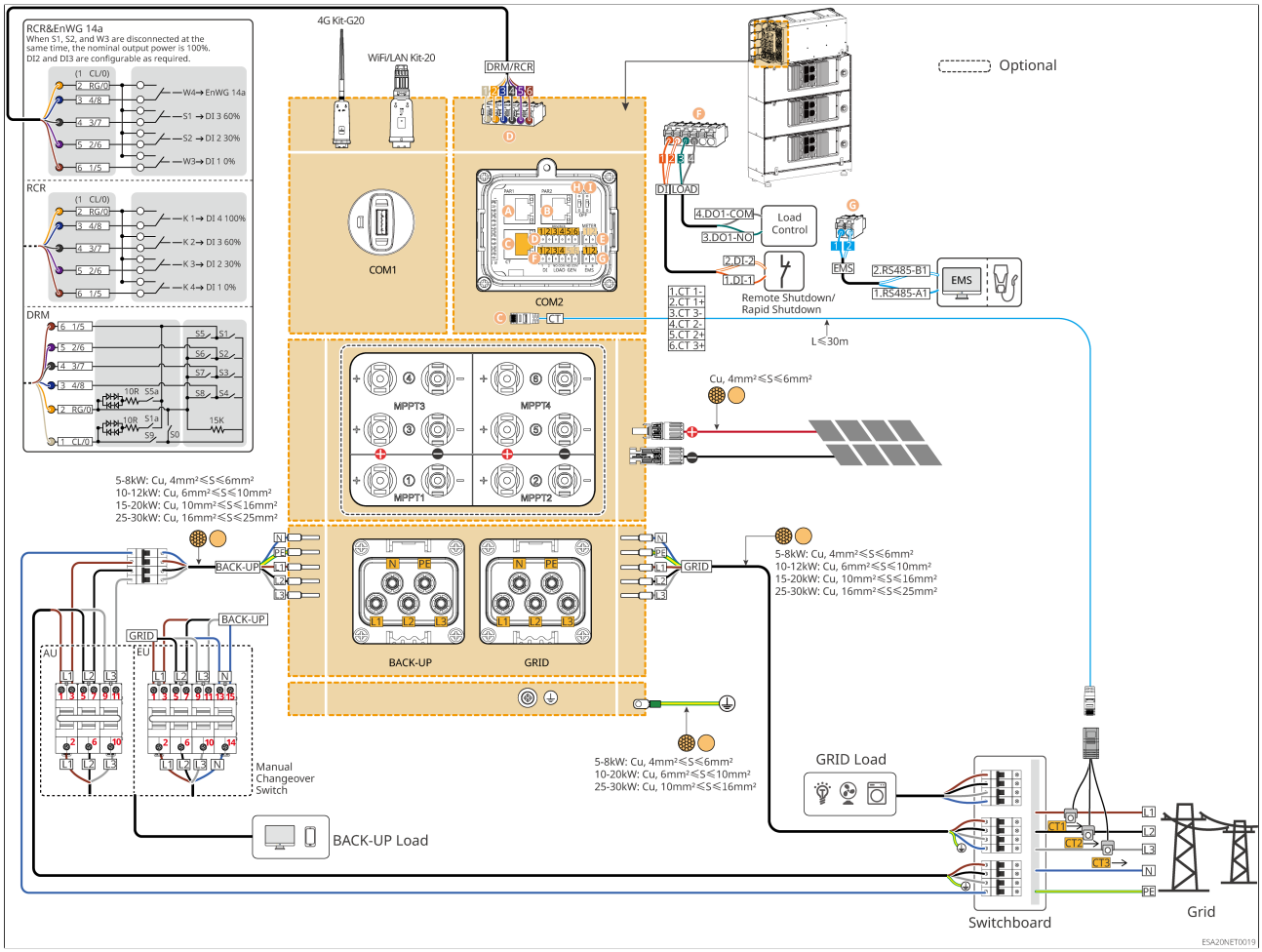

Figure26 General Scenario 2: Networking Diagram with Built-in Meter

Networking with GM330 electric meter

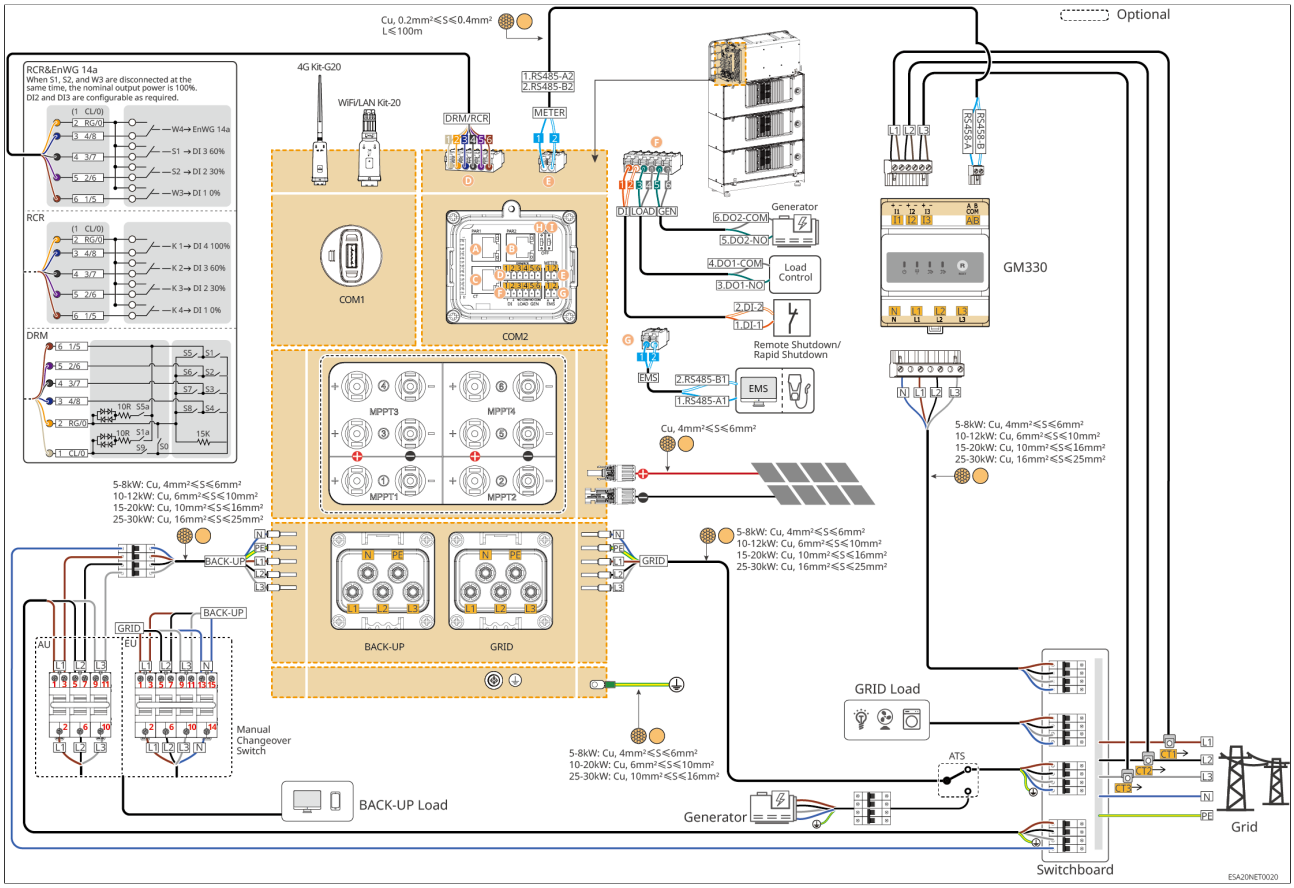

Figure27 General Scenario 3: Network Diagram with GM330 Meter

Configure GMK330 meter networking

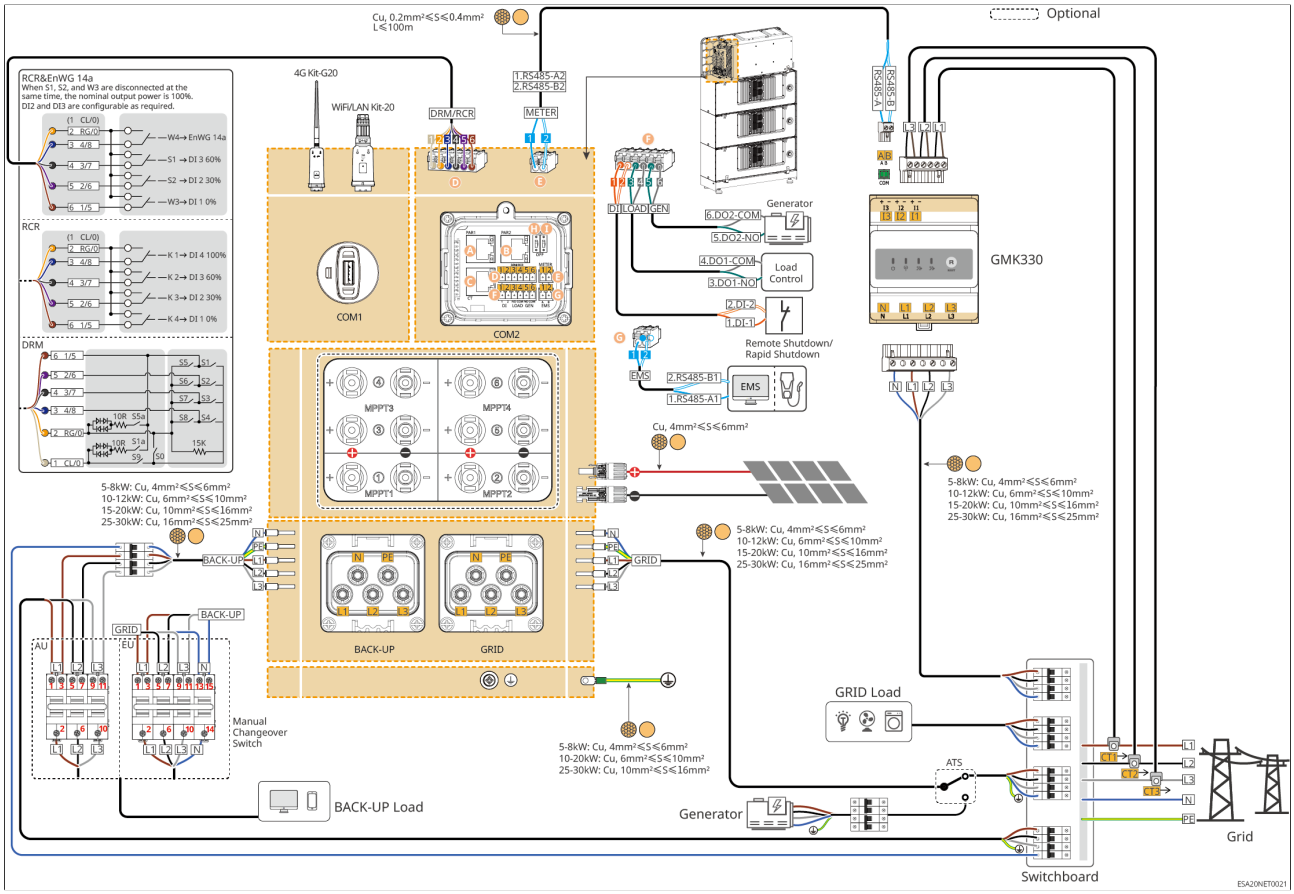

Figure28 General Scenario 4: Networking Diagram with GMK330 Meter

Inverter with Static Transfer Switch (STS) Network Diagram

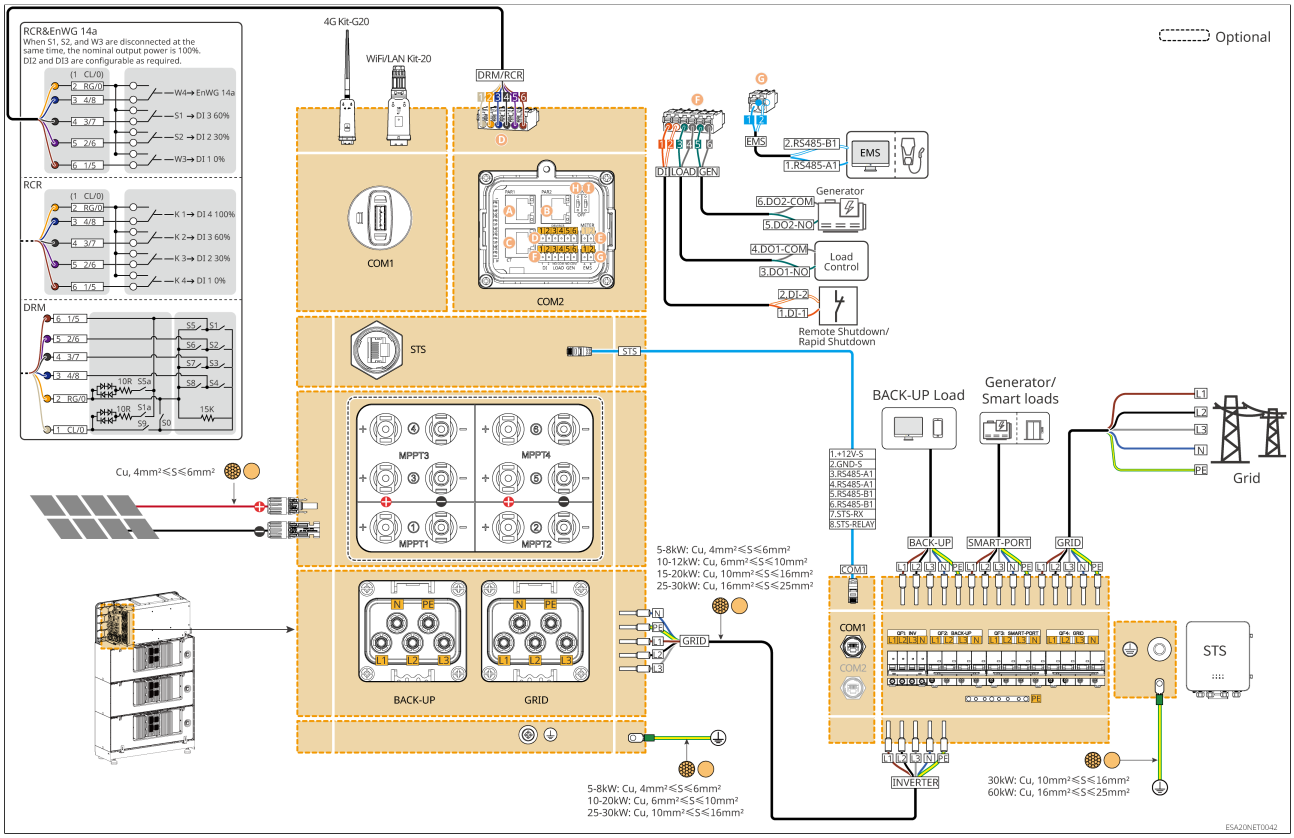

Figure29 General Scenario 5: Inverter with STS Whole House Backup Power Network Diagram

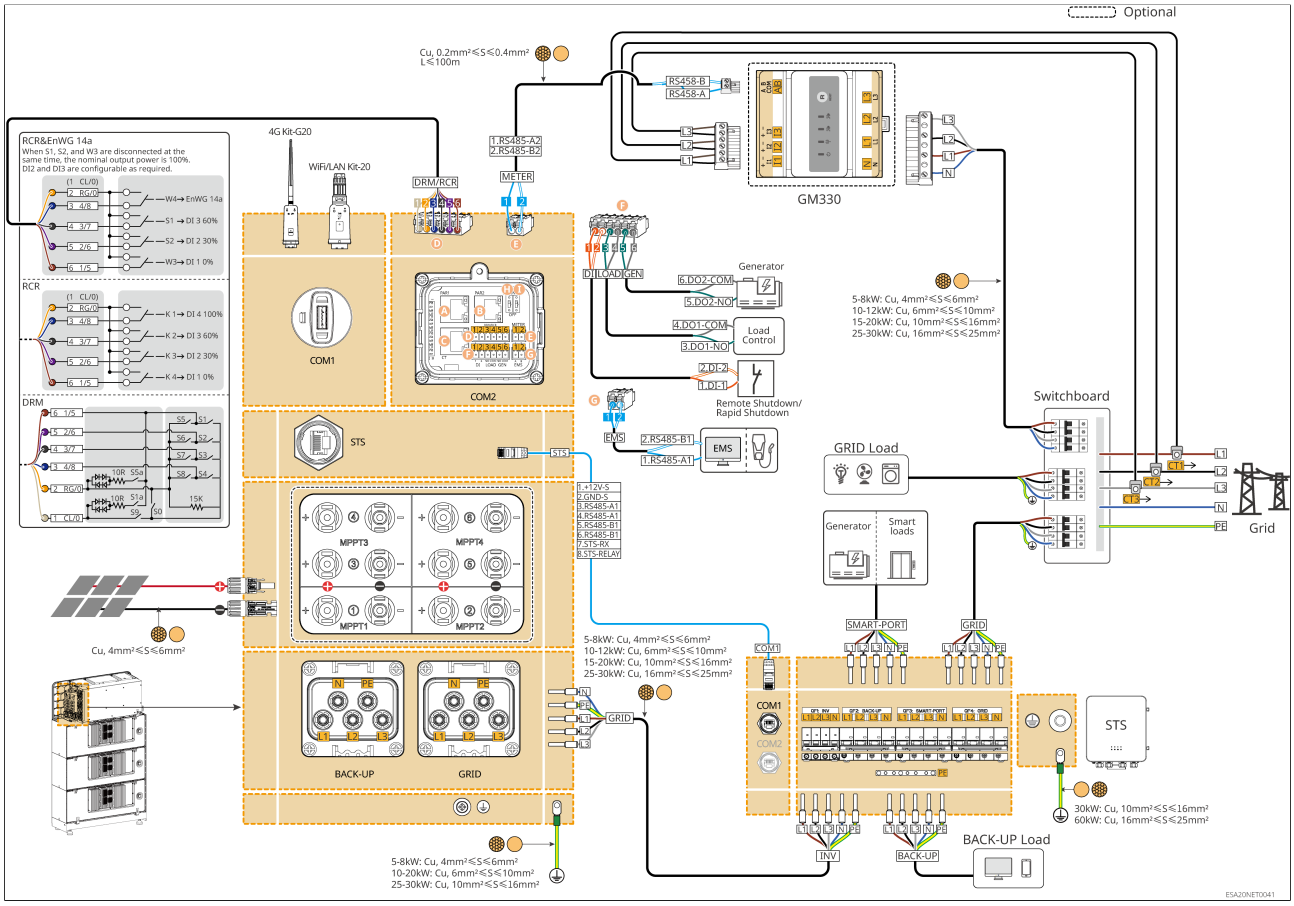

Figure30 General Scenario 6: Networking Diagram of Inverter with STS Partial Backup Power Supply

Inverter Parallel System Wiring Detail Diagram

The following diagram focuses on the wiring for parallel operation. For wiring requirements of other ports, please refer to the single-unit system.

Parallel inverter with built-in meter networking

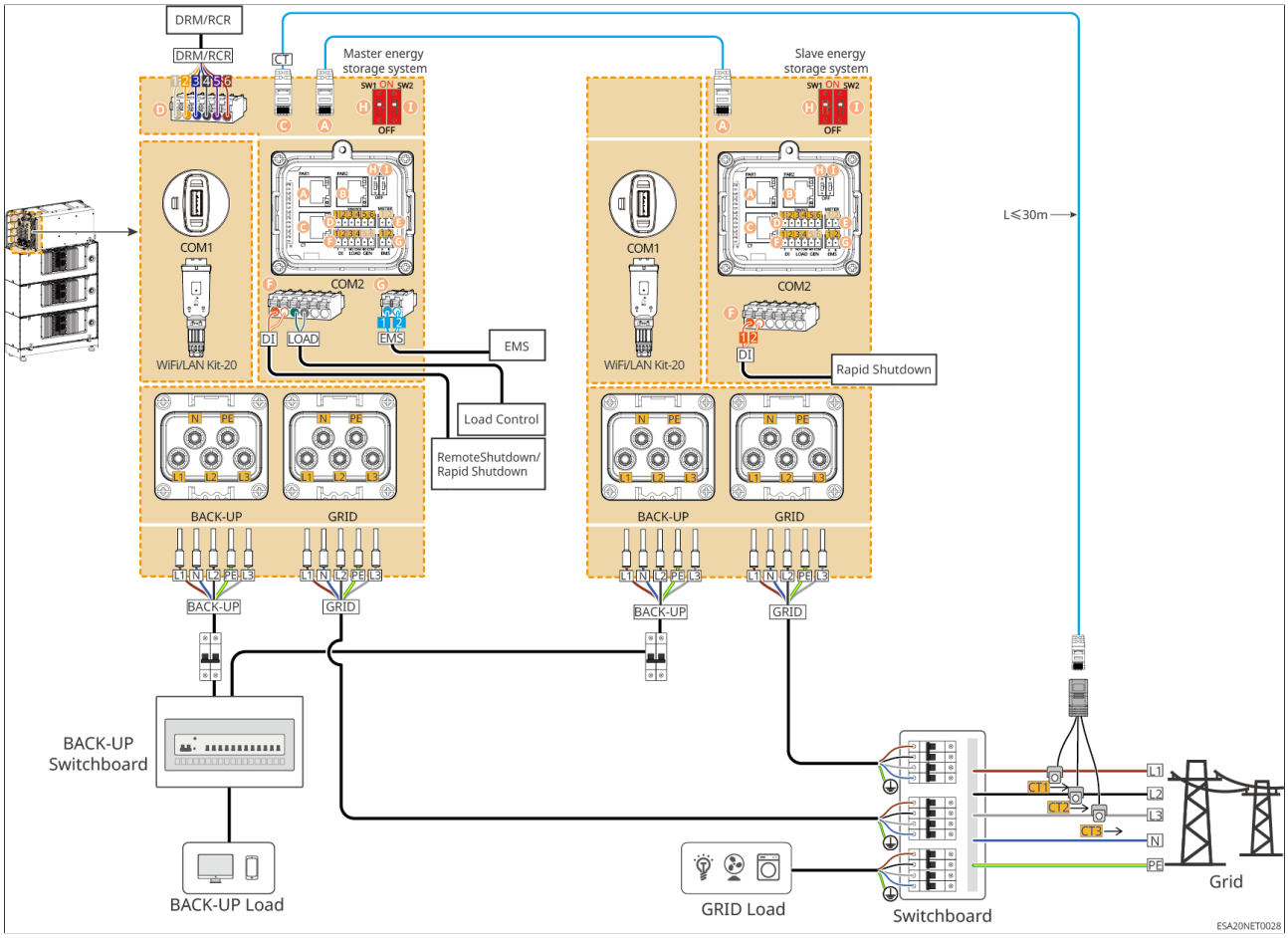

Figure31 General Scenario 7: Inverter Parallel Operation with Built-in Meter Wiring Diagram

Parallel inverters with GMK330 networking

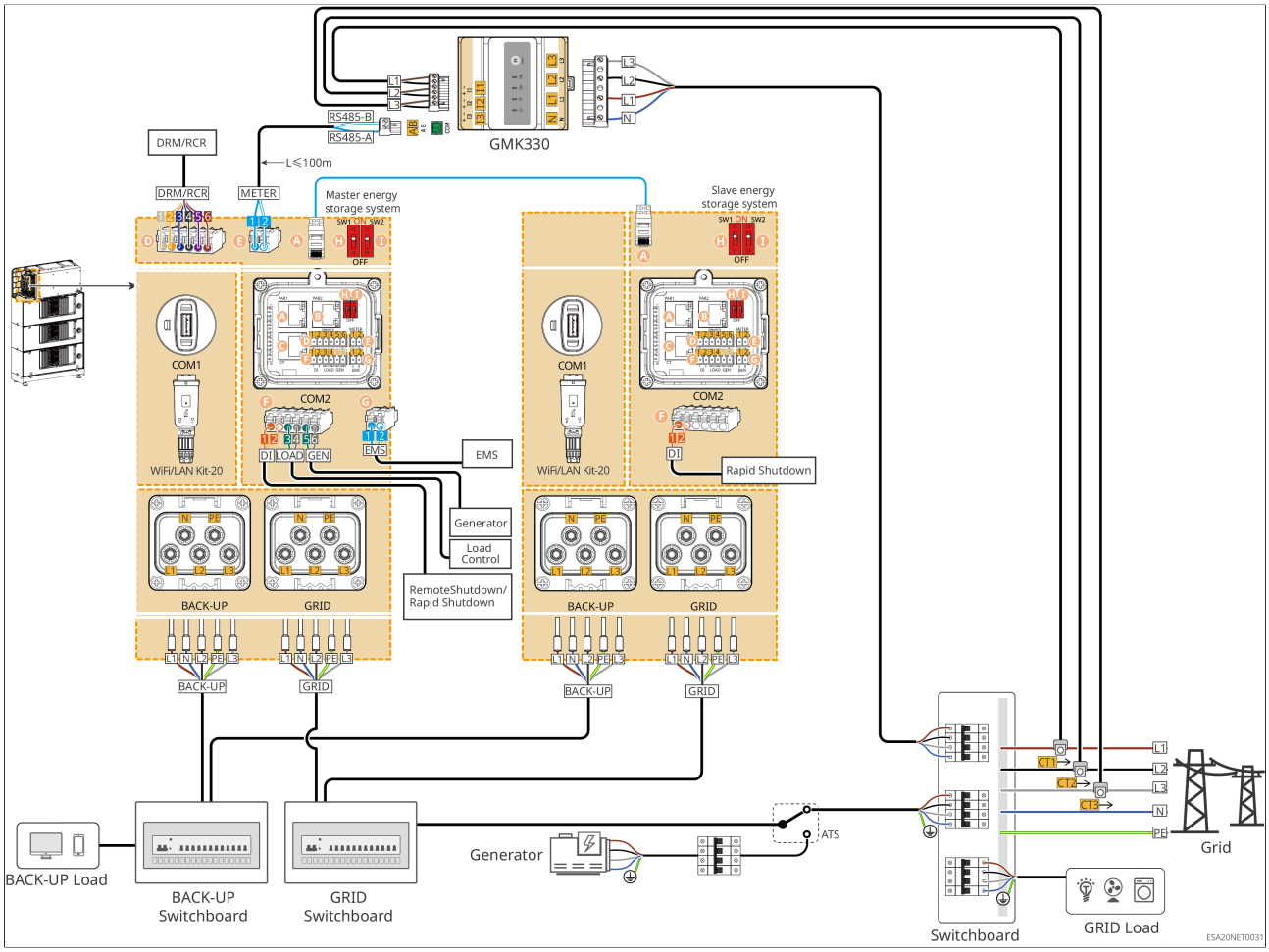

Figure32 General Scenario 8: Inverter Parallel Operation with GMK330 Networking Diagram

Inverter parallel connection with GM330 networking

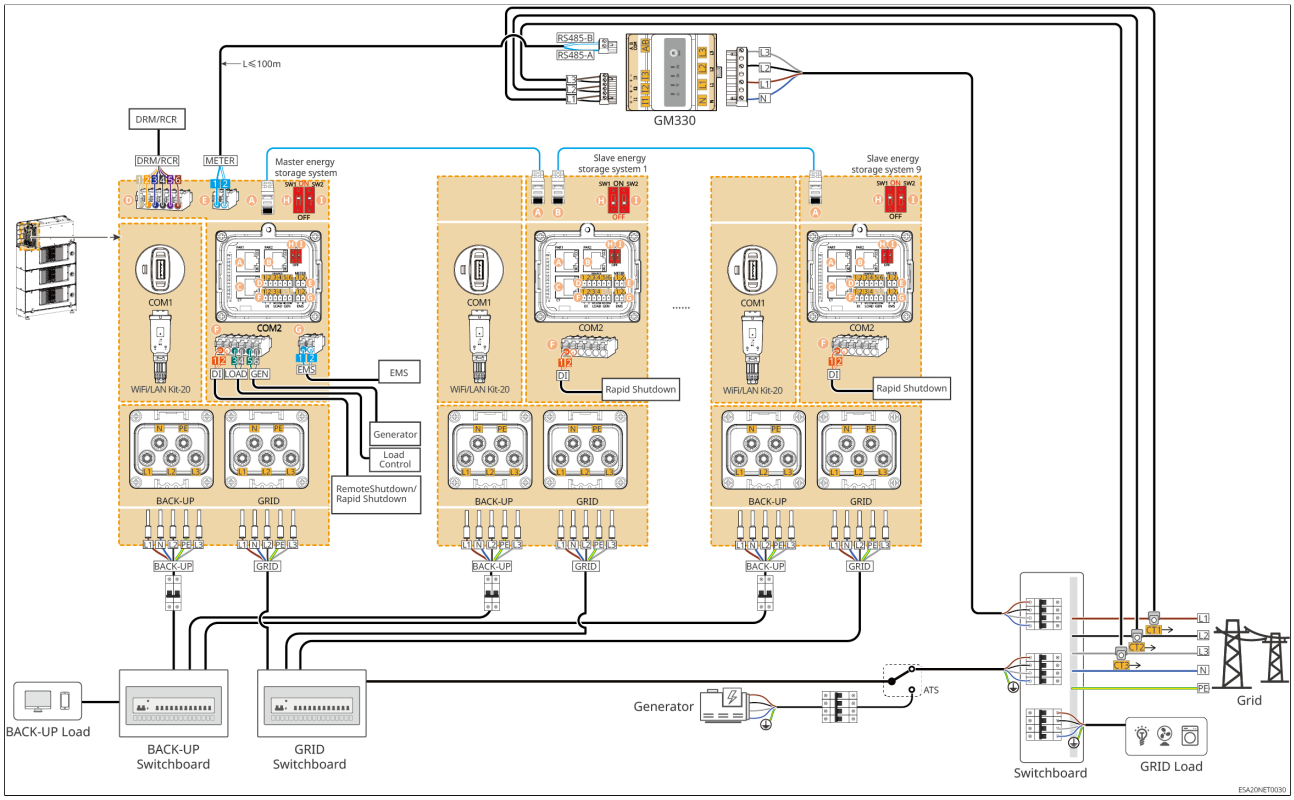

Figure33 General Scenario 9: Inverter Parallel Configuration with GM330 Network Diagram

5.3.2 Microgrid Scenario

Inverter Standalone System Wiring Detail Diagram

- Microgrid Scenario does not support connection to generators or parallel operation of multiple units.
- The manual transfer switch is optional. Please choose whether to install it based on the actual usage scenario.
- In Microgrid Scenario, if the grid-connected inverter requires output power limiting, please connect a meter or CT device separately.

Built-in meter + GM330 meter networking

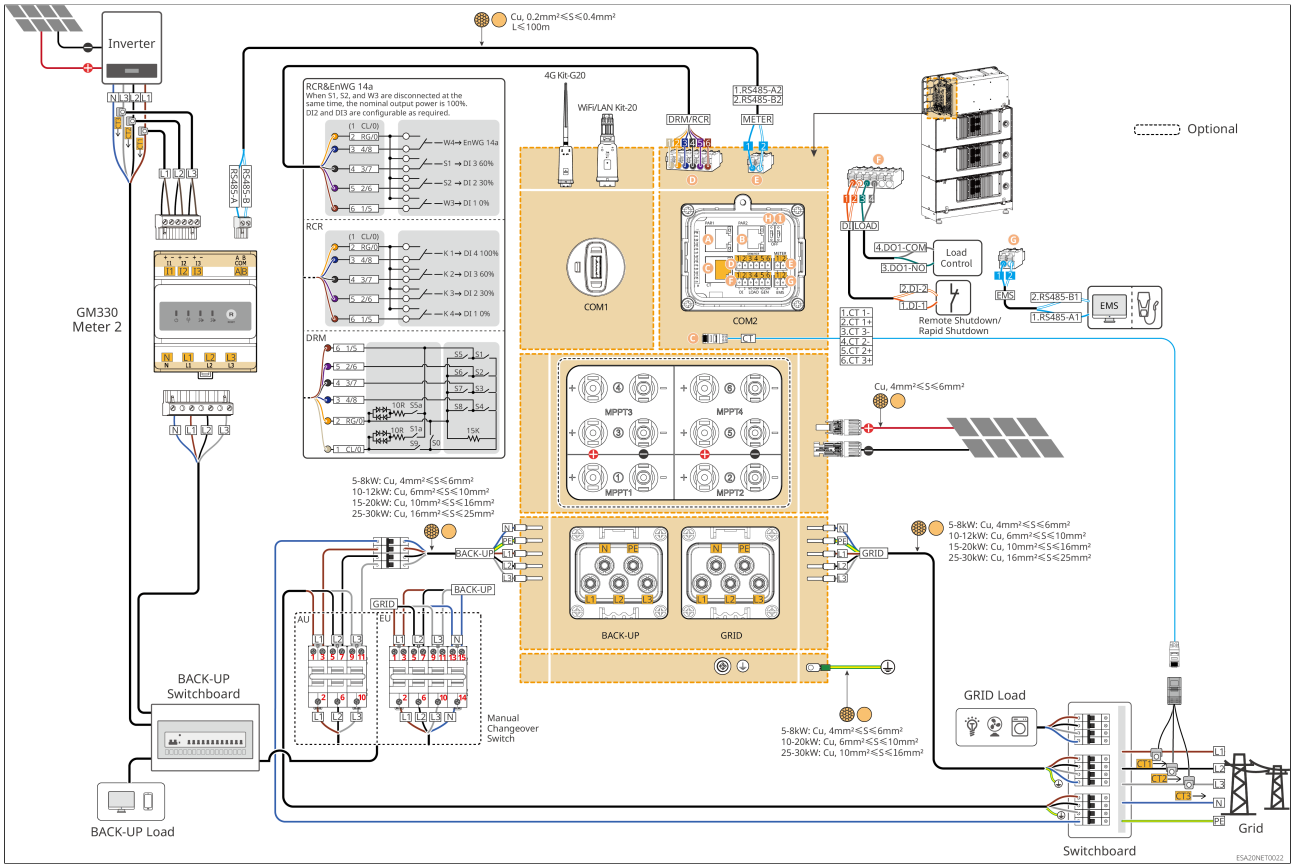

Figure34 Microgrid Scenario 1: Networking diagram of built-in meter + GM330 meter

GMK330 + GMK330 meter networking

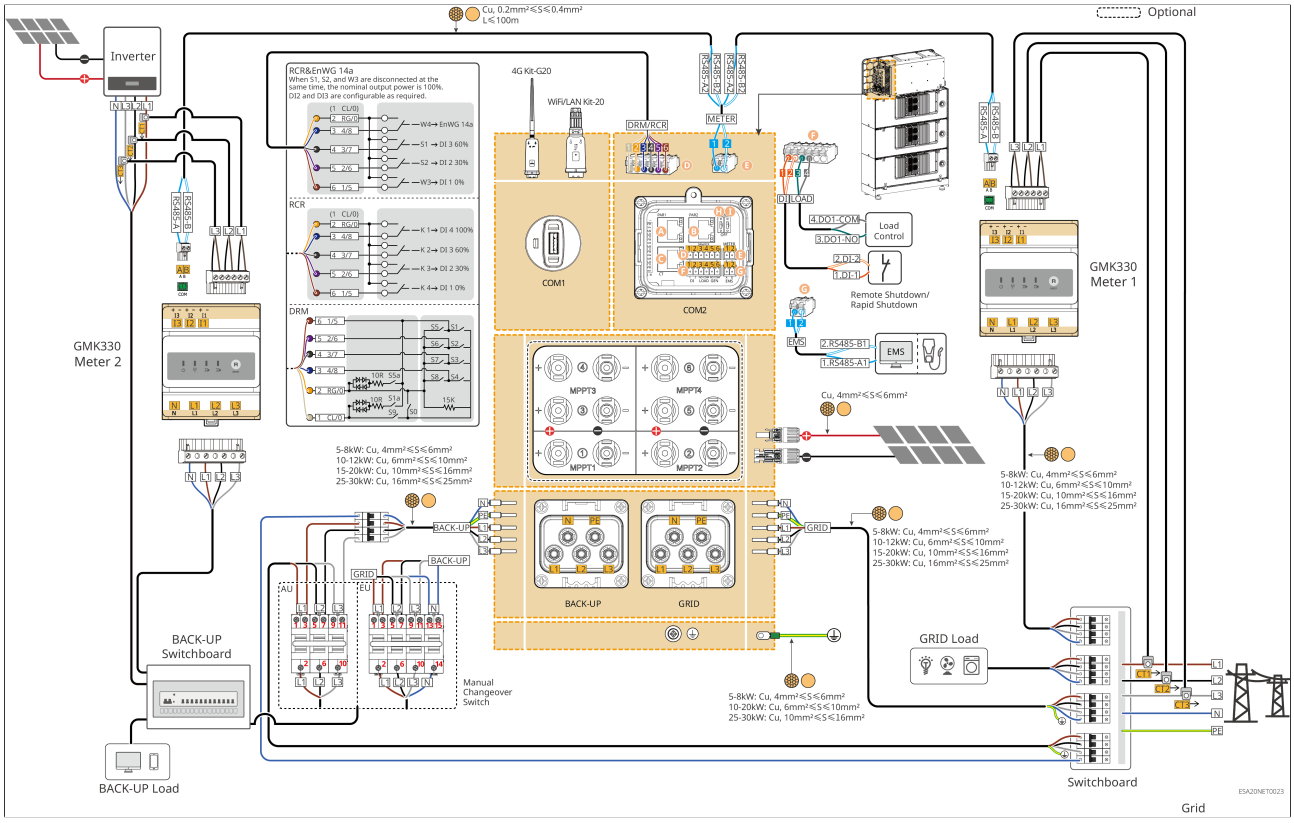

Figure35 Microgrid Scenario 2: Networking diagram of GMK330 + GMK330 meters

Microgrid Scenario, inverter combined with static transfer switch (STS) networking

In the Microgrid Scenario with STS partial backup power networking diagram, the GM330 meter is used as an example for illustration. For wiring methods of other meter models, please refer to the wiring instructions for general scenarios.

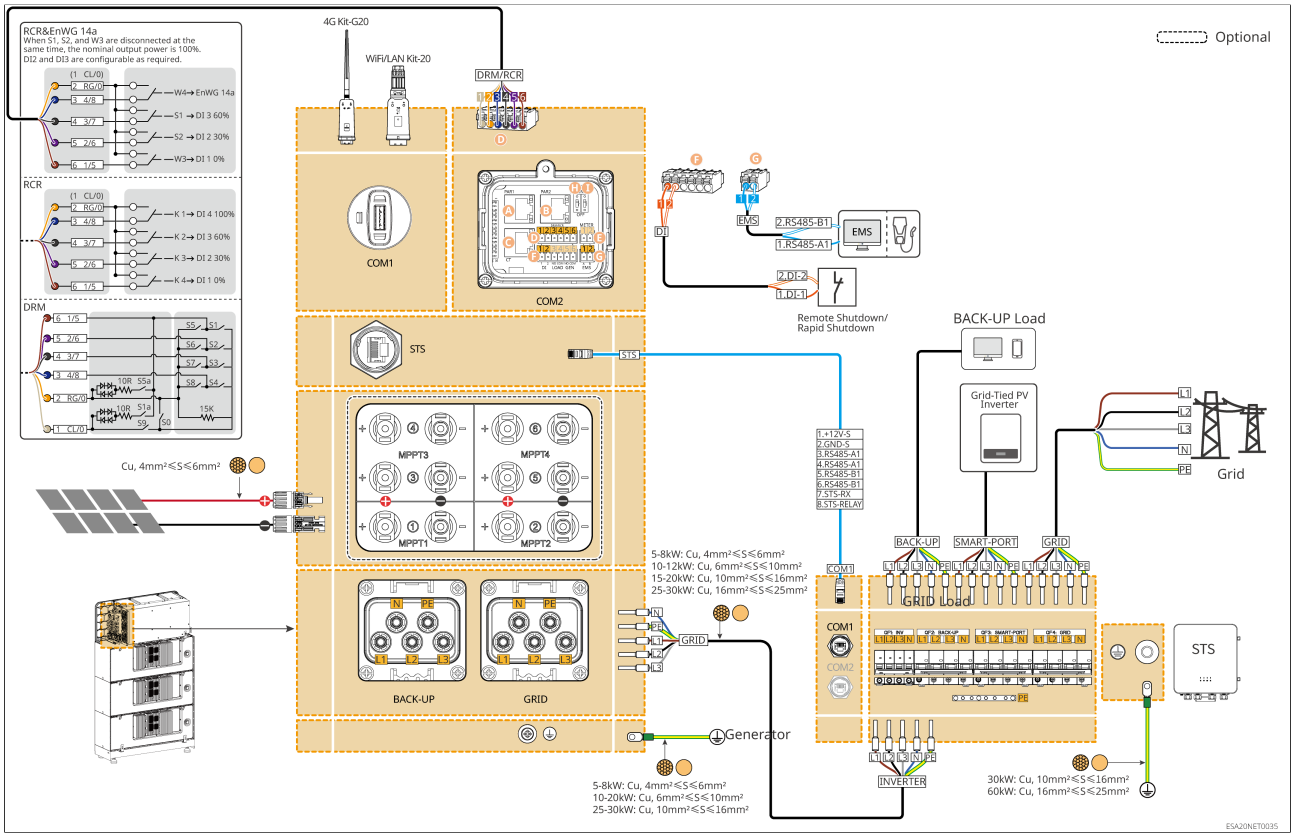

Figure36 Microgrid Scenario 4: Networking diagram of inverter + STS full-house backup power

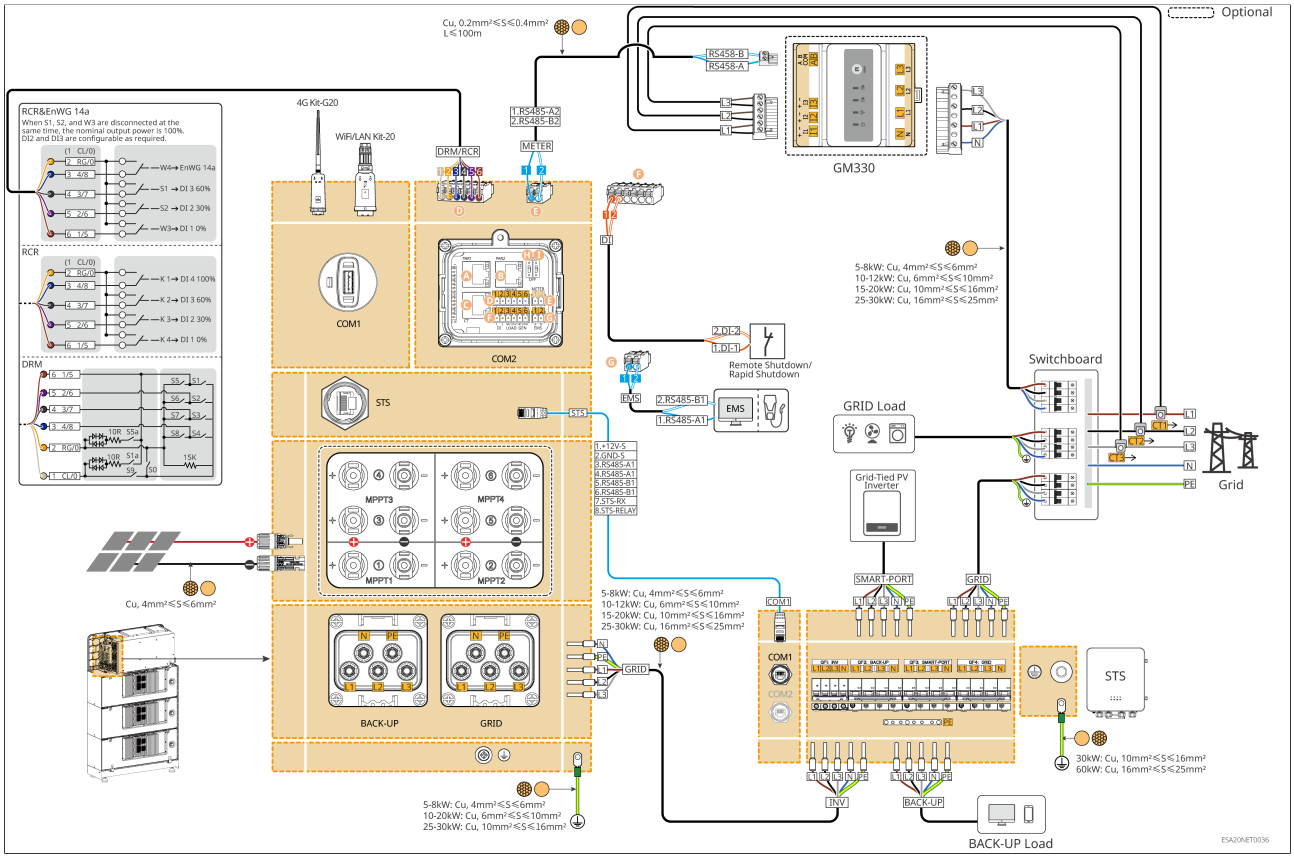

Figure37 Microgrid Scenario 5: Networking diagram of inverter + STS partial backup power

5.3.3 coupling scenario

Inverter Single-Unit System Wiring Diagram

- Manual transfer switch is optional. Please decide whether to install it based on the actual application scenario.
- In coupling scenarios, if the grid-connected inverter requires output power limitation, separately connect devices such as an electric meter or CT.

Built-in meter + GMK330 meter networking

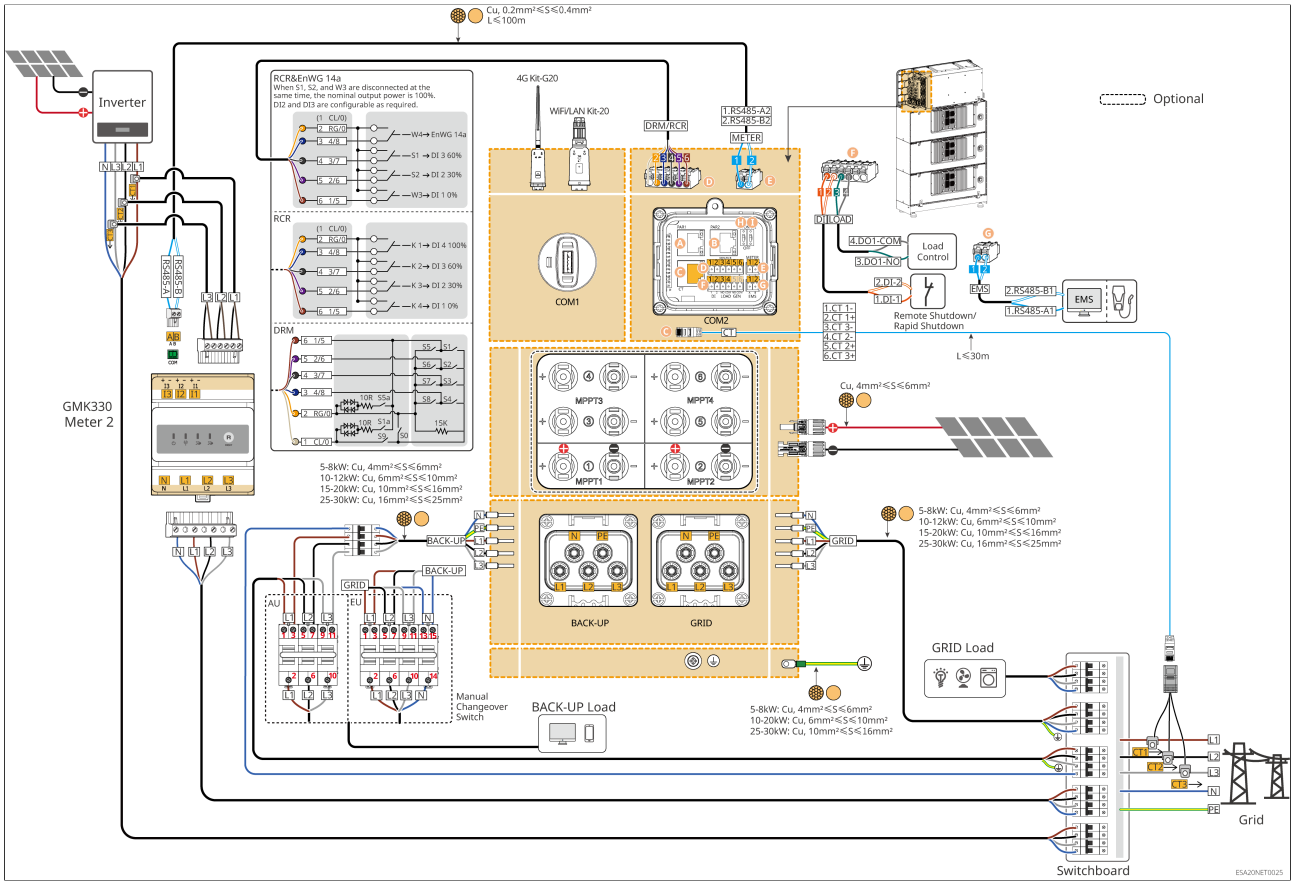

Figure38 Coupling Scenario 1: Network Diagram of Built-in Meter + GMK330 Meter

GM330+GM330 Meter Networking

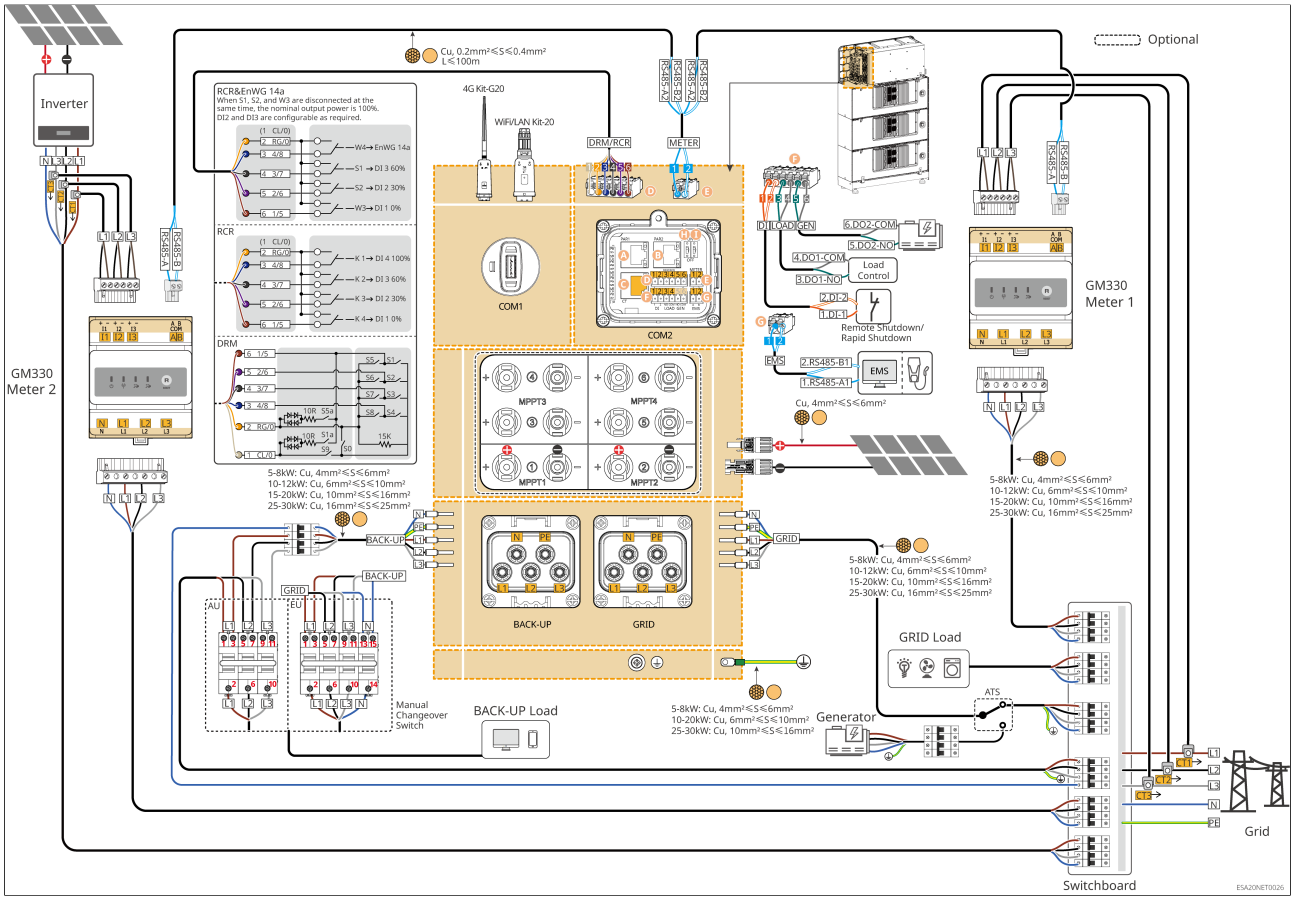

Figure39 Coupling Scenario 2: GM330+GM330 Meter Networking Diagram

Coupling scenario, inverter with static transfer switch (STS) network diagram

In the coupling scenario with STS partial backup power networking diagram, the meter is illustrated using GM330+GM330 as an example. For wiring methods of other meter models, refer to the general scenario wiring instructions.

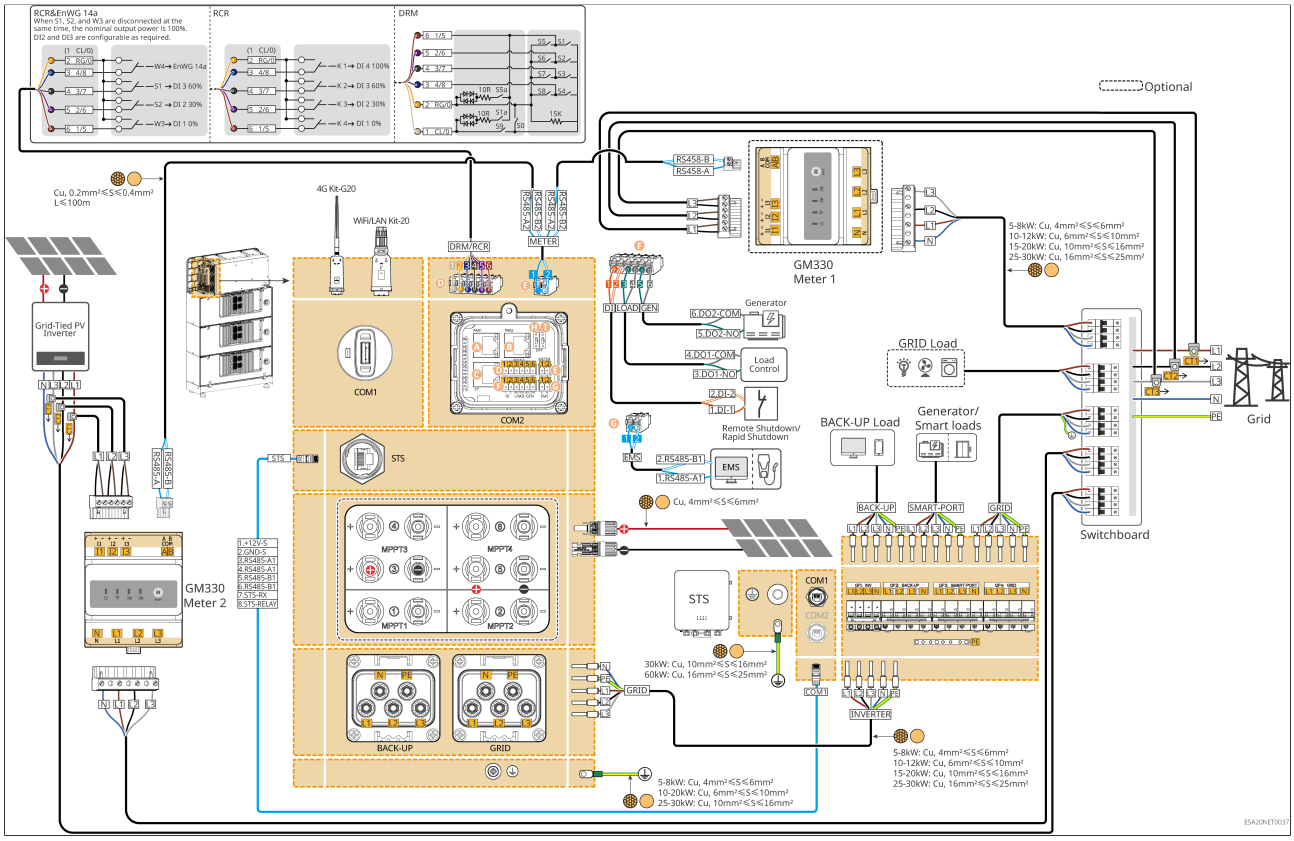

Figure40 Coupling Scenario 3: Inverter with STS Partial Backup Power Grid Connection Diagram

Inverter Parallel System Wiring Detailed Diagram

Coupled scenario, take the GM330 as an example for parallel meter wiring. For wiring of other meter models, refer to the parallel meter wiring instructions in the general scenario.

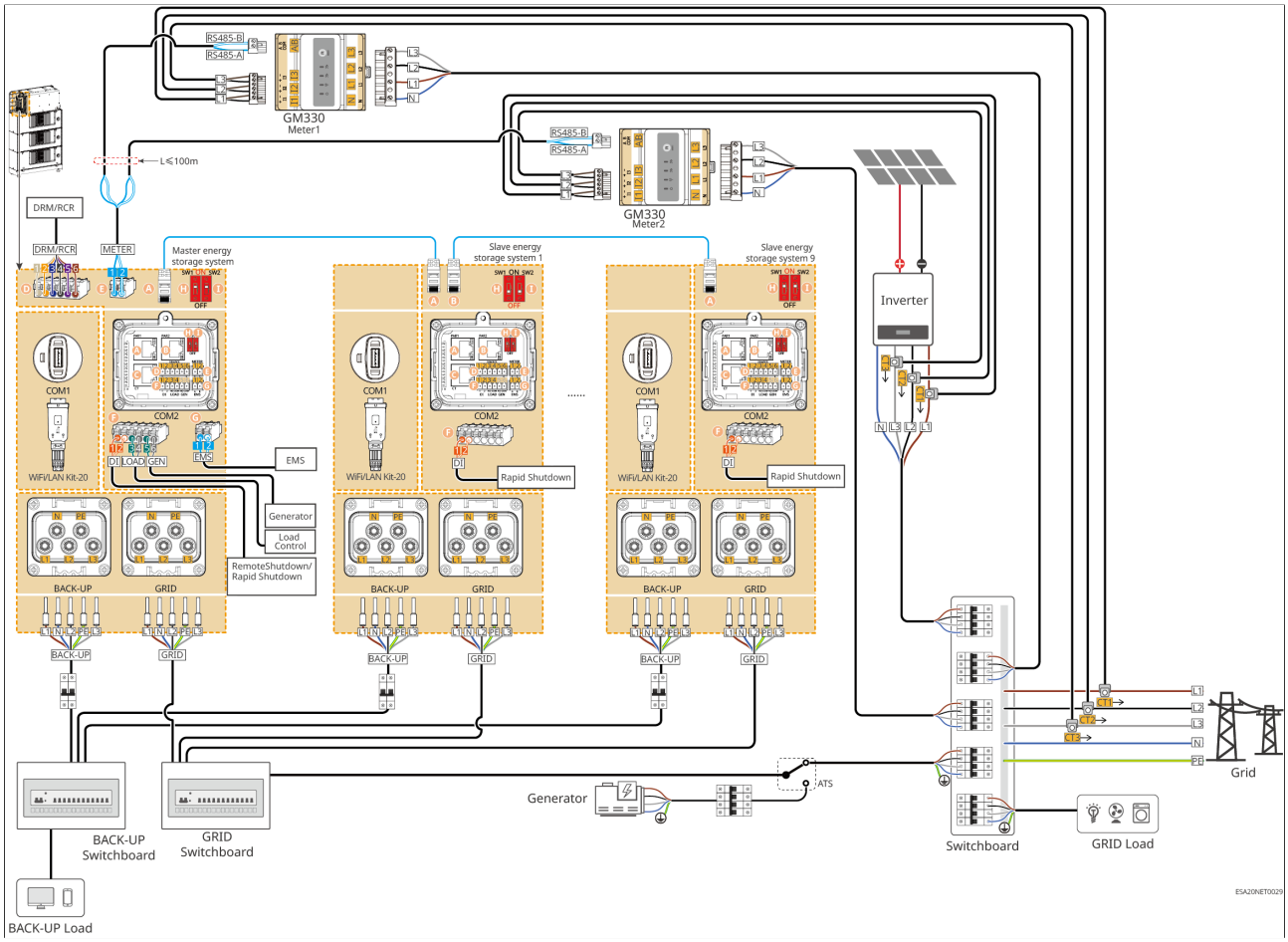

Figure41 Coupling Scenario 4: Diagram of Parallel Networking with GM330

5.4 Preparing Materials

WARNING

- Do not connect loads between the inverter and the AC switch directly connected to the inverter.
- Each inverter must be equipped with an AC output circuit breaker. Multiple inverters cannot be connected to one AC circuit breaker simultaneously.
- To ensure that the inverter can safely disconnect from the grid in case of abnormalities, please connect an AC circuit breaker on the AC side of the inverter. Select a suitable AC circuit breaker according to local regulations.
- When the inverter is powered on, the BACK-UP AC port is live. If maintenance is required on the BACK-UP Loads, please power off the inverter; otherwise, it may cause electric shock.
- For cables used in the same system, it is recommended that the following cable conductor material, cross-sectional area, length, etc., be consistent.
  - Inverter's BACK-UP AC cable
  - Inverter's GRID AC cable
- The inverter supports connecting to a generator via an ATS switch to achieve switching between grid and generator power supply. The ATS switch is by default connected to the grid.

5.4.1 Preparing Breakers

No.	Breaker	Recommended Specifications	How to Obtain	Remarks
1	GRID breaker BACK-UP breaker	For partial backup scenarios, the following are recommended: • Nominal Voltage ≥230Vac • Rated current requirements are as follows: ◦ GW5K-ETA-G20: 20A ◦ GW6K-ETA-G20: 20A ◦ GW8K-ETA-G20: 20A ◦ GW9.999K-ETA-G20: 32A	Customer-supplied	When making the actual selection, you may also select a breaker that complies with local installation regulations based on the actual working current.

No.	Breaker	Recommended Specifications	How to Obtain	Remarks
		◦ GW10K-ETA-G20: 32A ◦ GW12K-ETA-G20: 40A ◦ GW15K-ETA-G20: 50A ◦ GW20K-ETA-G20: 50A ◦ GW25K-ETA-G20: 63A ◦ GW29.999K-ETA-G20: 80A ◦ GW30K-ETA-G20: 80A ◦ GW5K-BTA-G20: 20A ◦ GW6K-BTA-G20: 20A ◦ GW8K-BTA-G20: 20A ◦ GW9.999K-BTA-G20: 32A ◦ GW10K-BTA-G20: 32A ◦ GW12K-BTA-G20: 40A ◦ GW15K-BTA-G20: 50A ◦ GW20K-BTA-G20: 50A ◦ GW25K-BTA-G20: 63A ◦ GW29.999K-BTA-G20: 80A ◦ GW30K-BTA-G20: 80A For whole-home backup scenarios, the following are recommended: • Nominal Voltage ≥230Vac • Rated current requirements are as follows: ◦ GW5K-ETA-G20: 63A ◦ GW6K-ETA-G20: 63A ◦ GW8K-ETA-G20: 63A		

No.	Breaker	Recommended Specifications	How to Obtain	Remarks
		◦ GW9.999K-ETA-G20: 80A ◦ GW10K-ETA-G20: 80A ◦ GW12K-ETA-G20: 80A ◦ GW15K-ETA-G20: 100A ◦ GW20K-ETA-G20: 100A ◦ GW25K-ETA-G20: 125A ◦ GW29.999K-ETA-G20: 125A ◦ GW30K-ETA-G20: 125A ◦ GW5K-BTA-G20: 63A ◦ GW6K-BTA-G20: 63A ◦ GW8K-BTA-G20: 63A ◦ GW9.999K-BTA-G20: 80A ◦ GW10K-BTA-G20: 80A ◦ GW12K-BTA-G20: 80A ◦ GW15K-BTA-G20: 100A ◦ GW20K-BTA-G20: 100A ◦ GW25K-BTA-G20: 125A ◦ GW29.999K-BTA-G20: 125A ◦ GW30K-BTA-G20: 125A Note: If the inverter BACK-UP port is not used, the GRID breaker can be selected based on the maximum grid-connected current.		
2	ATS switch	For the same model, the ATS switch and the GRID breaker have the same specifications.	Customer-supplied	

No.	Breaker	Recommended Specifications	How to Obtain	Remarks
3	RCD	RCD device installation and RCD specification selection: It is recommended to connect an external Type A RCD with a residual current trip level of ≥300mA to the inverter AC-side output (for inverter capacity <30kVA, select the residual current operating level as 300mA; for inverter capacity ≥30kVA, select the residual current operating level as 10mA/kVA).	Customer-supplied	When making the actual selection, you may also choose an appropriate RCD specification based on local regulatory requirements.
4	(Optional) Manual transfer switch	Nominal Voltage ≥230Vac Rated current requirements are as follows: • GW5K-ETA-G20, GW6K-ETA-G20, GW8K-ETA-G20, GW9.999K-ETA-G20, GW10K-ETA-G20, GW12K-ETA-G20, GW15K-ETA-G20, GW20K-ETA-G20, GW5K-BTA-G20, GW6K-BTA-G20, GW8K-BTA-G20, GW9.999K-BTA-G20, GW10K-BTA-G20, GW12K-BTA-G20, GW15K-BTA-G20, GW20K-BTA-G20: 63A • GW25K-ETA-G20, GW29.999K-ETA-G20, GW30K-ETA-G20, GW25K-BTA-G20, GW29.999K-BTA-G20, GW30K-BTA-G20: 80A	• Customer-supplied • Shipped with the inverter (Australia only)	• Only for single-unit applications • When making the actual selection, you may also choose an appropriate manual transfer switch based on local regulations.

5.4.2 Preparing Cables

No.	Cable	Recommended Specification	Supply Method
1	PE cable	**Inverter Protective Grounding:** • Single-core outdoor copper cable • Conductor cross-sectional area: ◦ GW5K-ETA-G20, GW6K-ETA-G20, GW8K-ETA-G20, GW5K-BTA-G20, GW6K-BTA-G20, GW8K-BTA-G20: 4-6mm^2 ◦ GW9.999K-ETA-G20, GW10K-ETA-G20, GW12K-ETA-G20, GW15K-ETA-G20, GW20K-ETA-G20, GW9.999K-BTA-G20, GW10K-BTA-G20, GW12K-BTA-G20, GW15K-BTA-G20, GW20K-BTA-G20: 6-10 mm^2 ◦ GW25K-ETA-G20, GW29.999K-ETA-G20, GW30K-ETA-G20, GW25K-BTA-G20, GW29.999K-BTA-G20, GW30K-BTA-G20: 10-16 mm^2	Customer-supplied
		STS Protective Grounding: • Conductor cross-sectional area: ◦ GW30K-STS-G10: 10-16mm^2 ◦ GW60K-STS-G10: 16-25mm^2 • Cable outer diameter: ◦ GW30K-STS-G10: 18-25mm ◦ GW60K-STS-G10: 24-32mm	
2	PV DC Cable	• Industry-standard outdoor PV cable • Conductor cross-sectional area: 4mm^2-6mm^2 • Cable outer diameter: 5.9mm-8.8mm	Customer-supplied

No.	Cable	Recommended Specification	Supply Method
3	AC Cable	• Inverter AC input/output cable (BACK UP/GRID): • Conductor cross-sectional area: ◦ GW5K-ETA-G20, GW6K-ETA-G20, GW8K-ETA-G20, GW5K-BTA-G20, GW6K-BTA-G20, GW8K-BTA-G20: 4-6mm^2 ◦ GW9.999K-ETA-G20, GW10K-ETA-G20, GW12K-ETA-G20, GW9.999K-BTA-G20, GW10K-BTA-G20, GW12K-BTA-G20: 6-10mm^2 ◦ GW15K-ETA-G20, GW20K-ETA-G20, GW15K-BTA-G20, GW20K-BTA-G20: 10-16mm^2 ◦ GW25K-ETA-G20, GW29.999K-ETA-G20, GW30K-ETA-G20, GW25K-BTA-G20, GW29.999K-BTA-G20, GW30K-BTA-G20: 16-25mm^2 • Multi-core outdoor copper cable outer diameter: ◦ GW5K-ETA-G20, GW6K-ETA-G20, GW8K-ETA-G20, GW9.999K-ETA-G20, GW10K-ETA-G20, GW12K-ETA-G20, GW5K-BTA-G20, GW6K-BTA-G20, GW8K-BTA-G20, GW9.999K-BTA-G20, GW10K-BTA-G20, GW12K-BTA-G20, GW15K-ETA-G20, GW20K-ETA-G20, GW15K-BTA-G20, GW20K-BTA-G20: 10-26mm ◦ GW25K-ETA-G20, GW29.999K-ETA-G20, GW30K-ETA-G20, GW25K-BTA-G20, GW29.999K-BTA-G20, GW30K-BTA-G20: 18-30mm	Customer-supplied

No.	Cable	Recommended Specification	Supply Method
4	STS Power Cable	• Multi-core outdoor copper cable • SMART-PORT AC cable, BACK-UP AC cable, GRID AC cable ◦ Conductor cross-sectional area: ▪ GW30K-STS-G10: 14-25mm² ▪ GW60K-STS-G10: 16-25mm² ◦ Cable outer diameter: 10-32mm	Customer-supplied
5	Smart Meter Power Cable	• Outdoor copper cable • Conductor cross-sectional area: 1mm²	Customer-supplied
6	Meter RS485 Communication cable	• Shielded twisted pair • Conductor cross-sectional area: 0.2mm²-0.4mm²	Customer-supplied
7	EMS or EV Charger RS485 Communication cable		
8	Remote Shutdown	• Shielded cable meeting local standards • Conductor cross-sectional area: 0.2mm²-0.4mm² • Cable outer diameter: 5mm-8mm	Customer-supplied
9	Load Control and Generator Control DO Communication cable		
10	RCR/DRED/14a Signal Cable		

No.	Cable	Recommended Specification	Supply Method
11	CT Communication cable	Standard straight-through Ethernet cable: • RJ45 shielded connector • CAT 5E or higher-grade straight-through shielded Ethernet cable • Connector specification must match the cable specification	Customer-supplied
12	Inverter Parallel Communication Cable	Standard straight-through Ethernet cable: • RJ45 shielded connector • CAT 5E or higher-grade straight-through shielded Ethernet cable ◦ Recommended length for CAT 5E or CAT 6E not exceeding 5 meters ◦ Recommended length for CAT 7E not exceeding 10 meters • Connector specification must match the cable specification	Customer-supplied
13	STS Communication cable	Standard straight-through Ethernet cable: • RJ45 shielded connector • CAT 5E or higher-grade straight-through shielded Ethernet cable • Connector specification must match the cable specification	Connect to inverter STS communication port: Shipped with the unit

No.	Cable	Recommended Specification	Supply Method
Note: The cable specifications recommended in the table are for reference only. During actual cable selection, factors such as installation ambient temperature, laying method, number of parallel runs, voltage deviation, and thermal stability must be comprehensively considered, and the ampacity should be corrected using corresponding correction factors. The selected cable must meet the following requirement: Cable ampacity ≥ Rated current of the overcurrent protection device ≥ Maximum rated current.			

5.5 Connect the Protection earth wire

⚠Warning

- The Protection Earthing of the chassis enclosure cannot replace the Protection Earth Wire of the AC output port. When wiring, ensure that both Protection Earth Wires are reliably connected.
- To improve the corrosion resistance of the terminal, it is recommended to apply silicone or paint on the outside of the grounding terminal for protection after the installation of the Protection earth wire connection is completed.
- When installing equipment, the Protection ground wire must be installed first; when removing equipment, the Protection ground wire must be removed last.
- Battery grounding is integrated into the blind-mate connector connected to the inverter, and the system is uniformly grounded through the inverter, so no separate grounding operation for the battery is required during installation. If the re is a need for split expansion, please ground the expanded Battery BANK separately.

Energy Storage System Grounding:

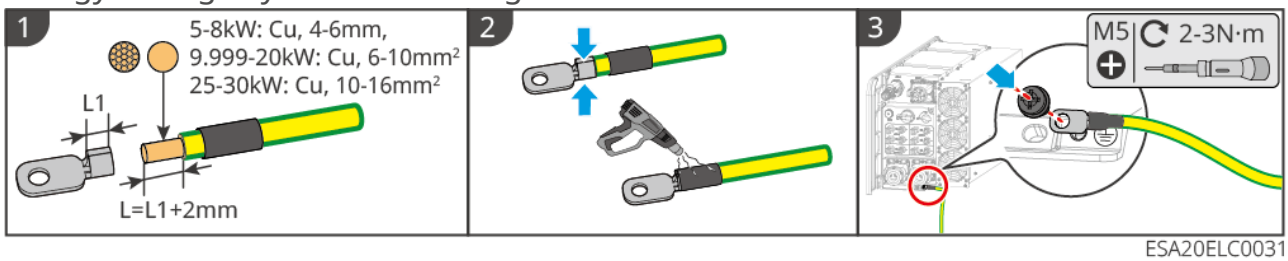

ESA20ELC0031

Expanded Battery BANK Grounding:

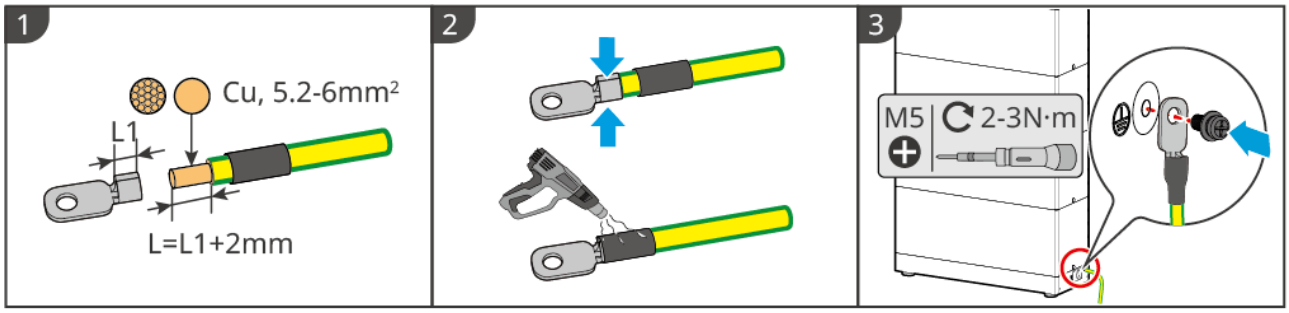

BAT20ELC0003

STS grounding

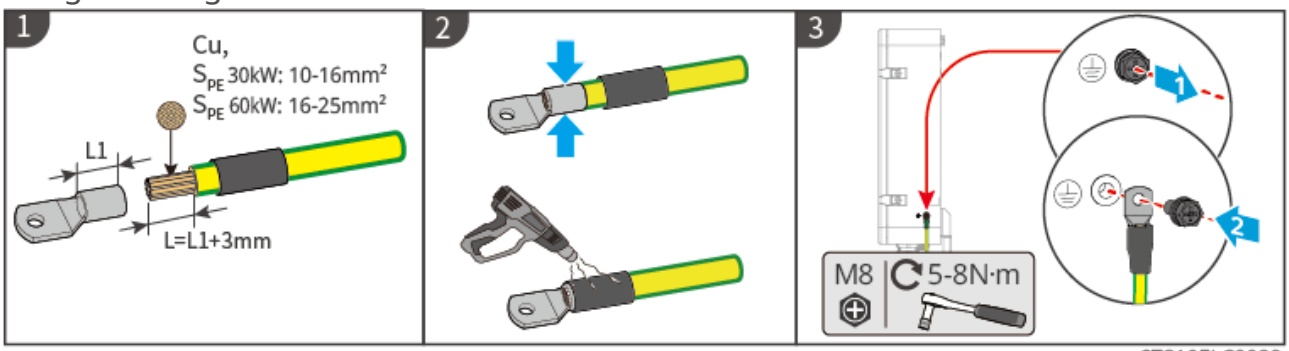

STS10ELC0029

5.6 Connecting the PV Cable

⚠DANGER

- Do not connect the same PV string to multiple inverters, as this may cause inverter damage.
- Before connecting the PV string to the inverter, confirm the following information. Failure to do so may cause permanent damage to the inverter, and in severe cases, may lead to fire, resulting in personal injury and property loss.
  1. Ensure the maximum short-circuit current and Max. Input Voltage for each MPPT are within the inverter's allowable range.
  2. Ensure the positive pole of the PV string is connected to the inverter's PV+ terminal, and the negative pole is connected to the inverter's PV- terminal.

⚠WARNING

- PV string output does not support grounding. Before connecting the PV string to the inverter, ensure the minimum insulation resistance to ground of the PV string meets the minimum insulation impedance requirement (R = Max. Input Voltage / 30mA).
- After completing the DC cable connection, ensure the cable connections are tight and secure, with no looseness.
- Use a multimeter to measure the positive and negative poles of the DC cable to ensure correct polarity (no reverse connection) and that the voltage is within the allowable range.

NOTICE

- The two PV strings within each MPPT should use the same model, the same number of panels, and the same tilt and azimuth angles to ensure maximum efficiency.
- Connecting PV cables applies only to the ETA model; the BTA model does not have PV connection ports.

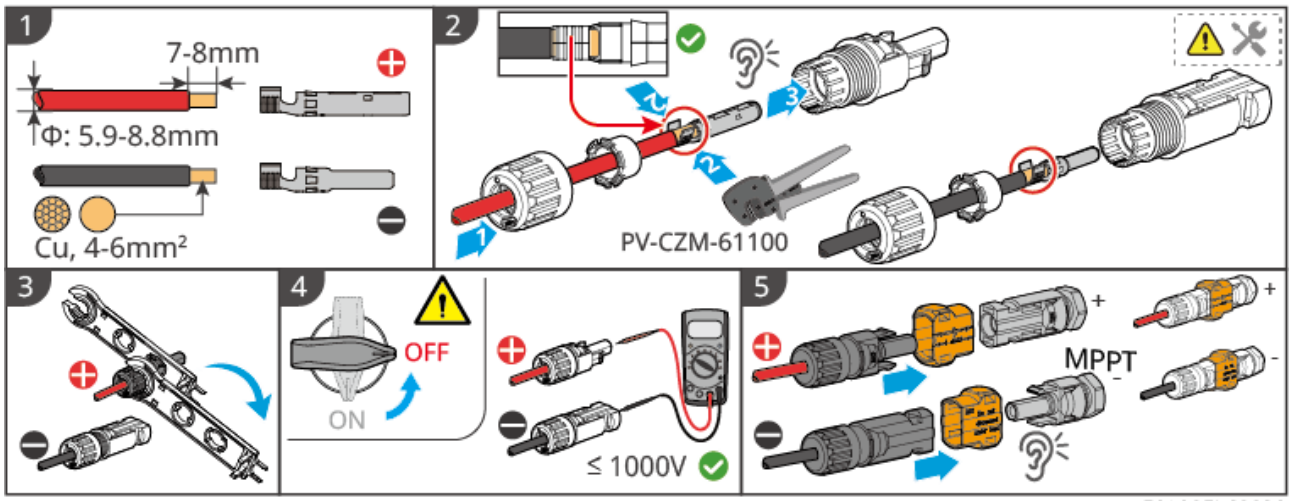

To disassemble the PV terminal, please refer to the following steps:

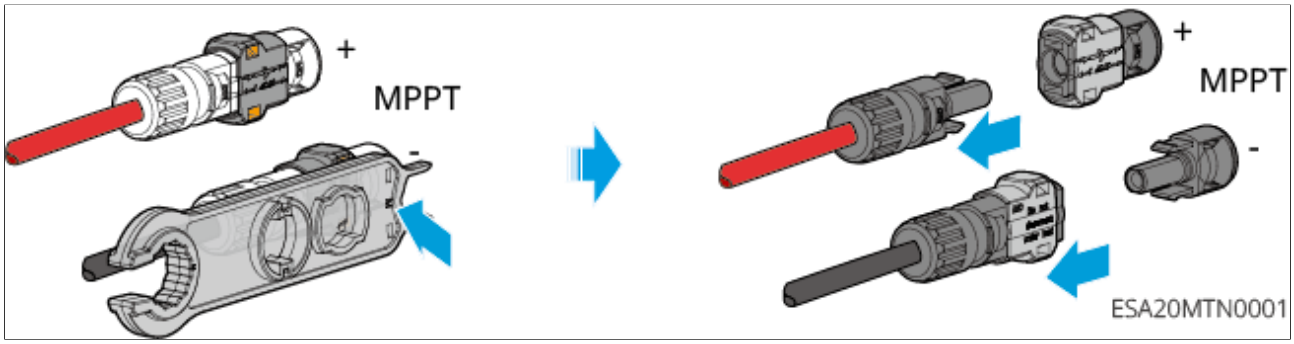

5.7 Expansion line connection for Battery

DANGER

- Do not connect any load between Inverter and Battery.
- When Connecting the Battery Cable, use insulated tools to prevent accidental electric shock or Battery Short Circuit.
- Please ensure that Batteryopen-circuit voltage is within the allowable range of Inverter.
- Between Battery and Battery, please configure DC Switch according to local laws and regulations.
- Inverterheat sink surface and surrounding areas are prohibited from wiring to prevent overheating damage to the wire harness.

energy storage system Expansion Overview

A1: Base shipped with Inverter

A2: Installation Base with parallel port

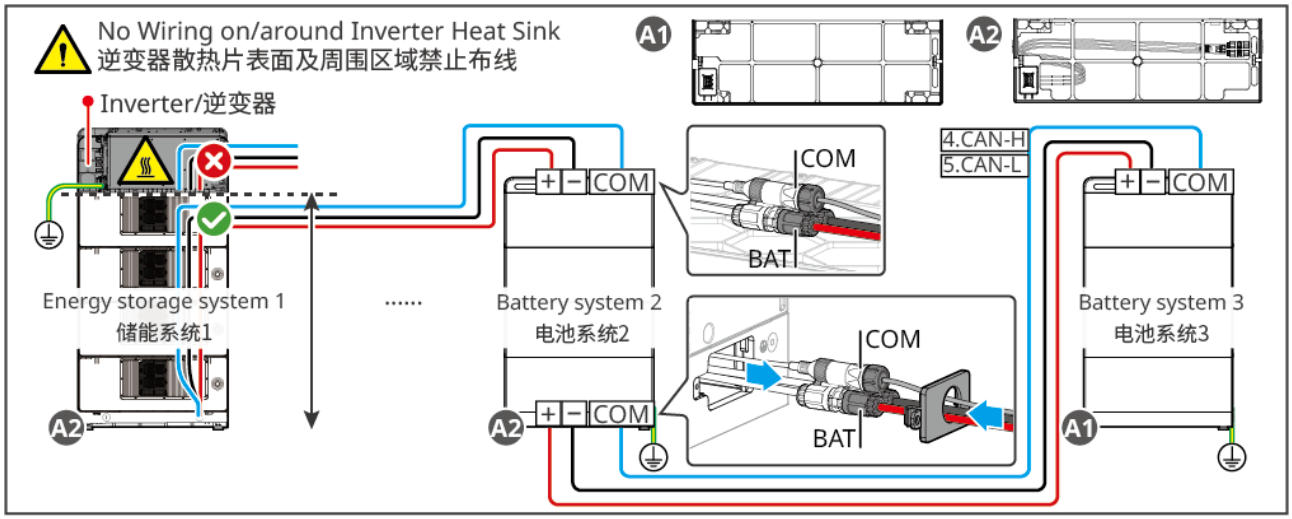

Battery system Expansion Harness Manufacturing Method

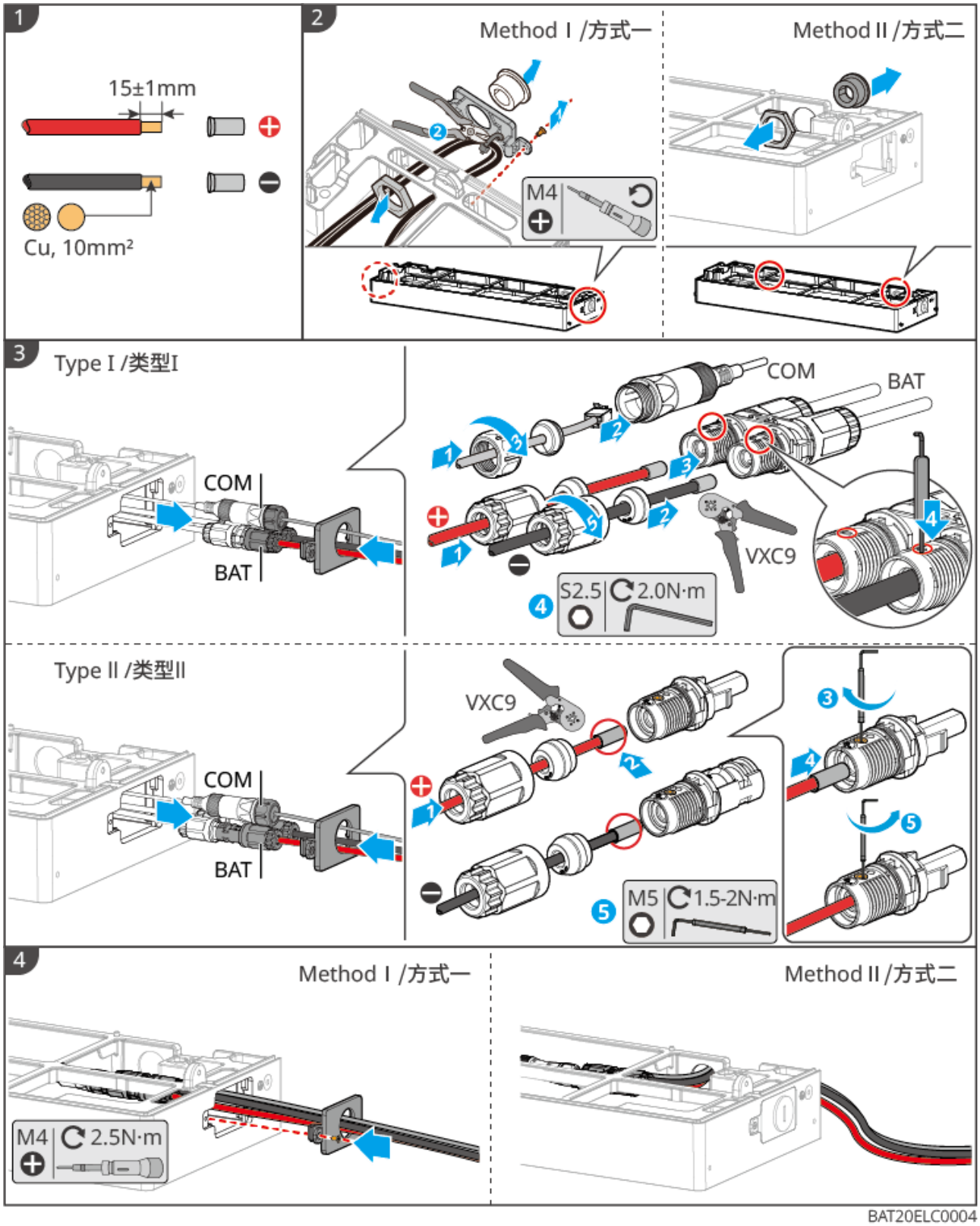

Battery Expansion Harness Disassembly Method

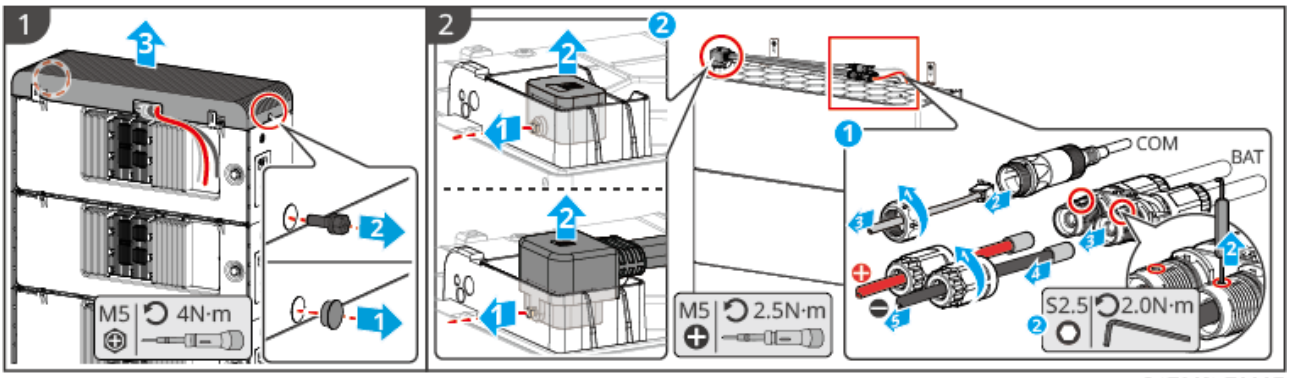

BAT20INT0007

5.8 Connect AC cable

⚠Warning

- The inverter integrates a Residual Current Monitoring unit (RCMU) to prevent residual current from exceeding the specified value. When the inverter detects a leakage current greater than the allowable value, it will quickly disconnect from the grid.
- During wiring, the AC wires must exactly match the "BACKUP" and "GRID" grounding ports on the AC terminals. Incorrect cable connections may result in equipment damage.
- Ensure the conductor core is fully inserted into the terminal connection hole with out any exposure.
- Please ensure that the insulation plate at the AC terminal is tightly clamped and free from loosening.
- Ensure cable connections are secure; otherwise, the terminals may over heat during equipment operation, causing damage to the equipment.

Note

- When crimping AC cables, it is recommended to use a crimping tool with a crimping shape of hexagonal (hexagon) or larger.
- After the system is installed and the wiring is confirmed to be correct, under normal operation, the BACK-UP port of the energy storage inverter should supply power to the critical household loads.
- After completing the AC wiring, switch the manual transfer switch to the "BACK-UP" position to engage. The fixed lock hasp supplied with the cabinet can be installed or not based on the actual situation. If installation is required, to facilitate the installation and removal of the lock accessory, a space of at least 35mm should be reserved on both left and right sides of the switch.
- STS is an optional accessory. If required, please refer to the wiring method below for connection.

5.8.1 Connect the inverter AC line.

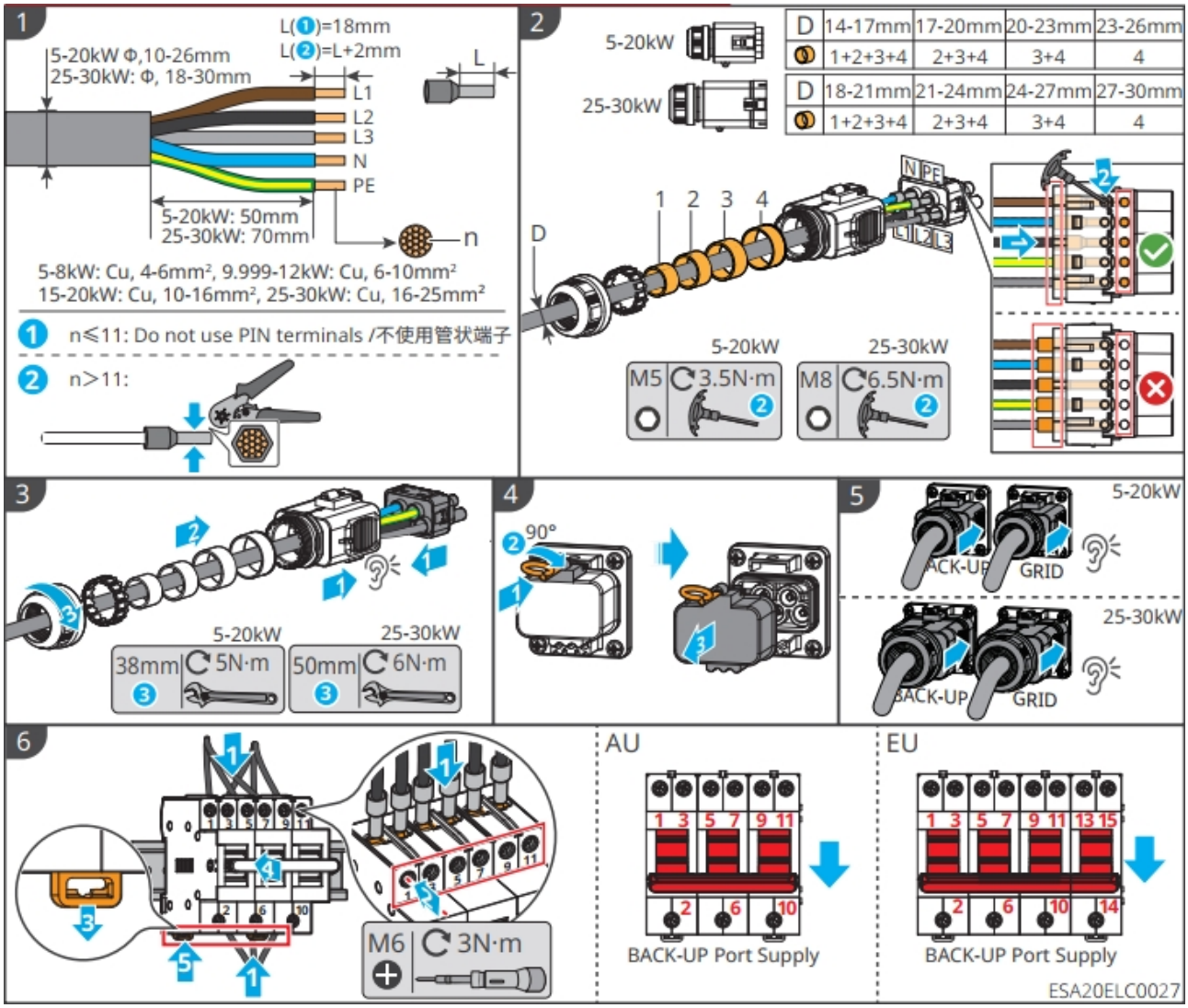

(Optional) Install manual transfer switch lock

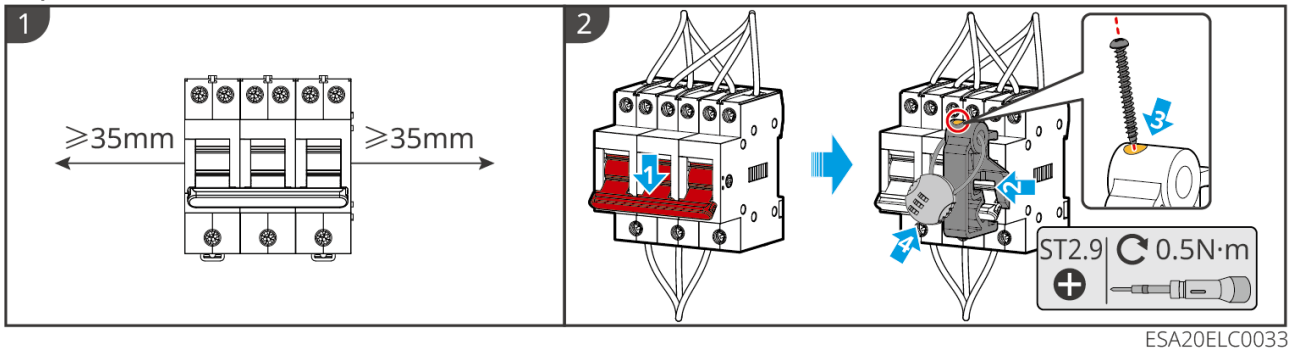

If you need to disassemble the AC terminals, please refer to the following steps:

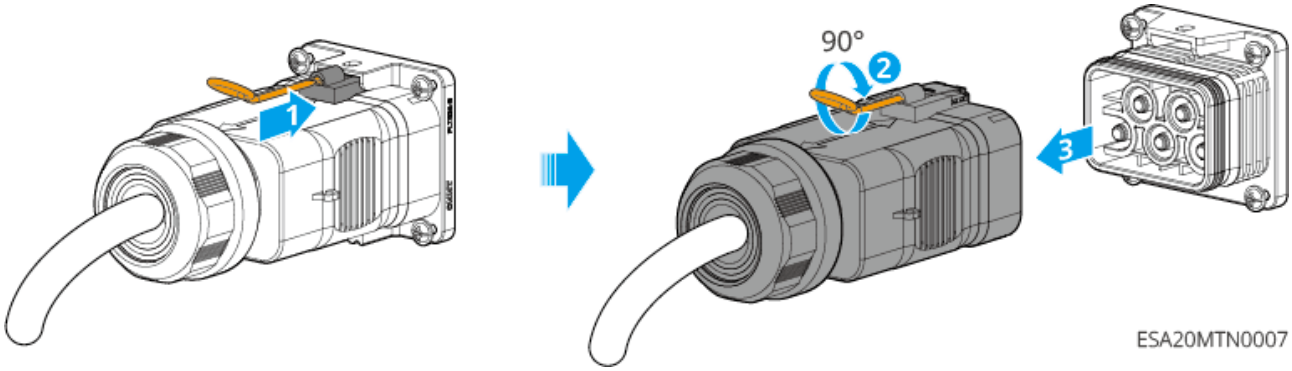

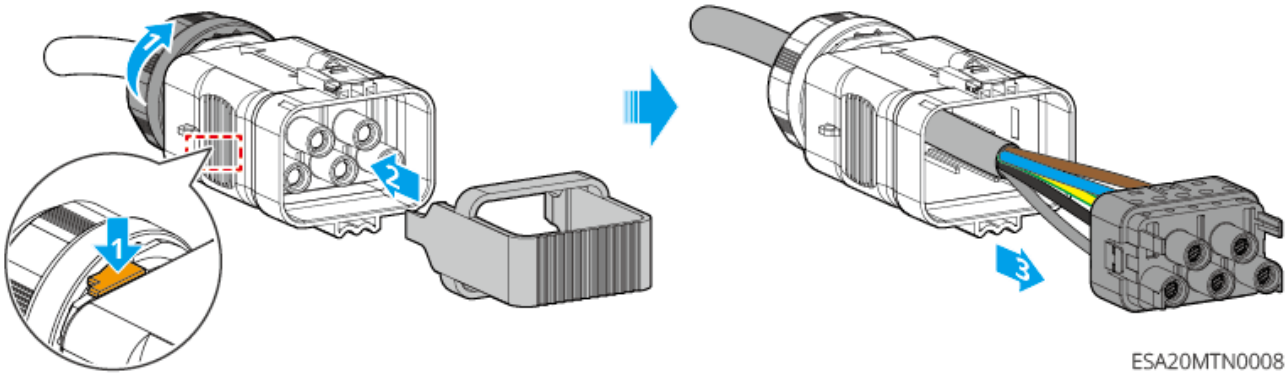

5.8.2 Connect the STS power line

⚠Warning

- To ensure that the STS can be safely disconnected from the grid in the event of an abnormal situation, please connect an AC Switch between the STS and the grid. Select an appropriate AC Switch according to local regulations.
- Please ensure that the STS is correctly connected to devices such as the inverter, grid, backup load, or generator. Incorrect connections may cause equipment damage.
- When wiring, the AC wires should fully match the "L1", "L2", "L3", "N", and "PE" ports of the AC terminals. Incorrect cable connection may cause a power outage.
- Ensure the conductor core is fully inserted into the terminal connection hole with out any exposure.
- Please ensure that the insulation plate at the AC terminal is tightly clamped and free from loosening.
- Ensure cable connections are secure; otherwise, the terminals may over heat during equipment operation, causing damage to the equipment.

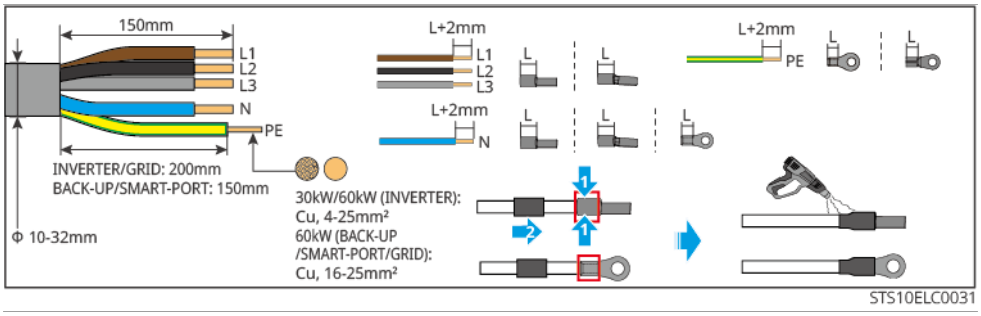

Figure42 cable fabrication

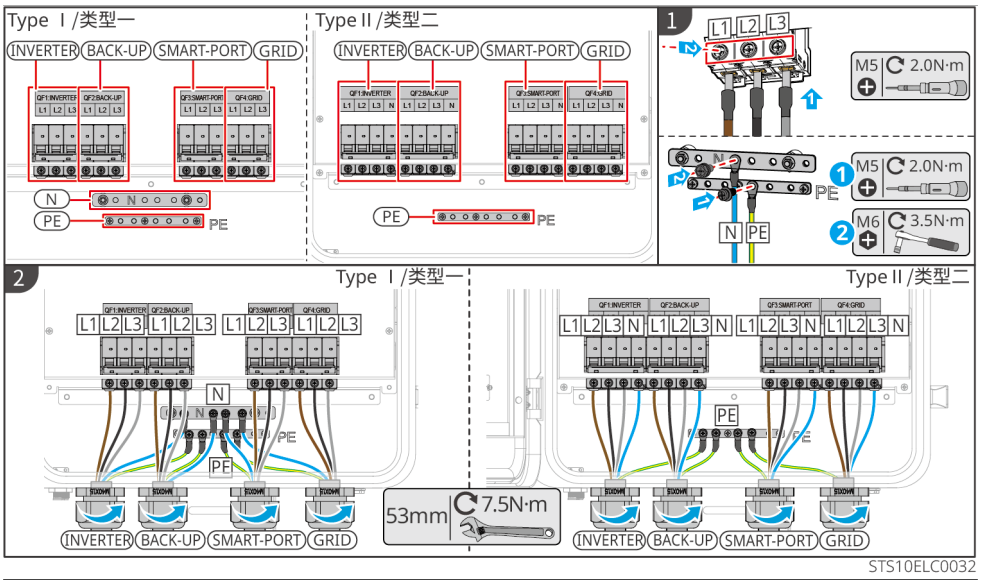

Figure43 30kW model cable connection

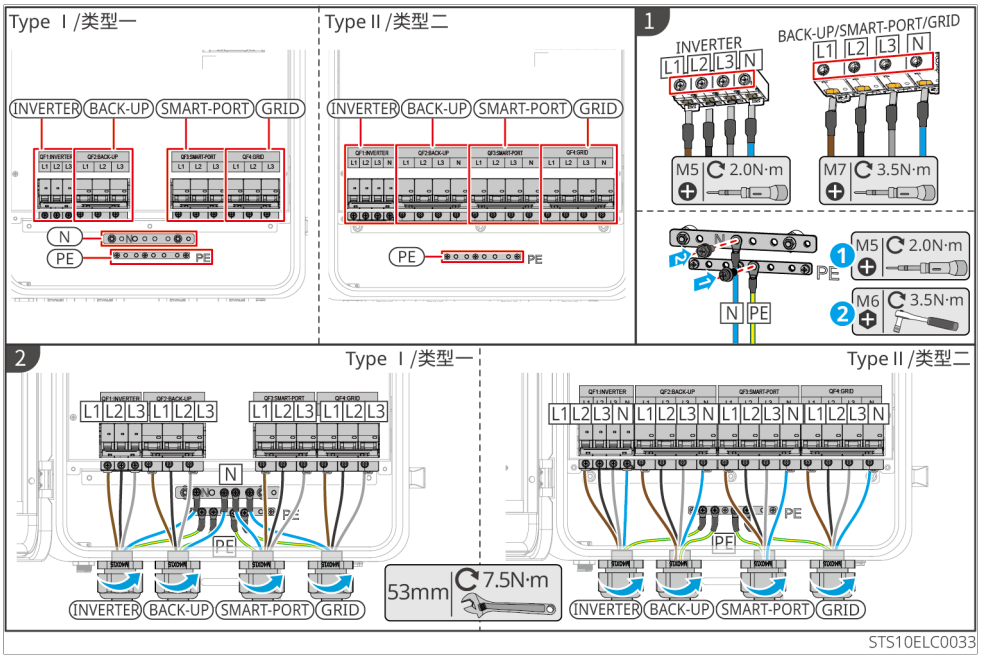

Figure44 Cable connection for 60kW model

5.9 Connecting the Meter Cable

NOTICE

- If there is a need for multiple inverters to be connected in parallel for networking, please consult the manufacturer to purchase a meter separately.
- Please ensure that the CT connection direction and phase sequence are correct; otherwise, it may lead to incorrect monitoring data.
- Ensure that all cables are connected correctly, tightly, and without looseness. Improper wiring may cause poor contact or damage to the meter.
- In areas with lightning risks, if the meter cable length exceeds 10m and the cables are not laid with grounded metal conduits, it is recommended to install external lightning protection devices.

GM330 Meter Wiring

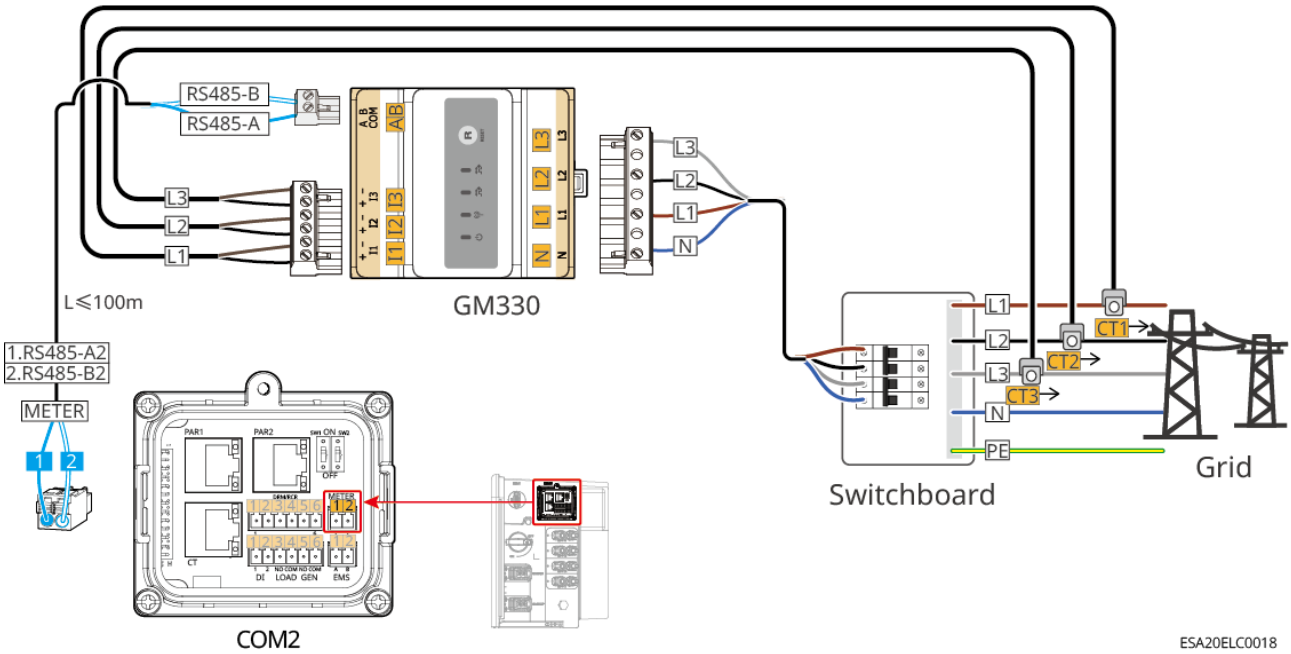

GMK330 Meter Wiring

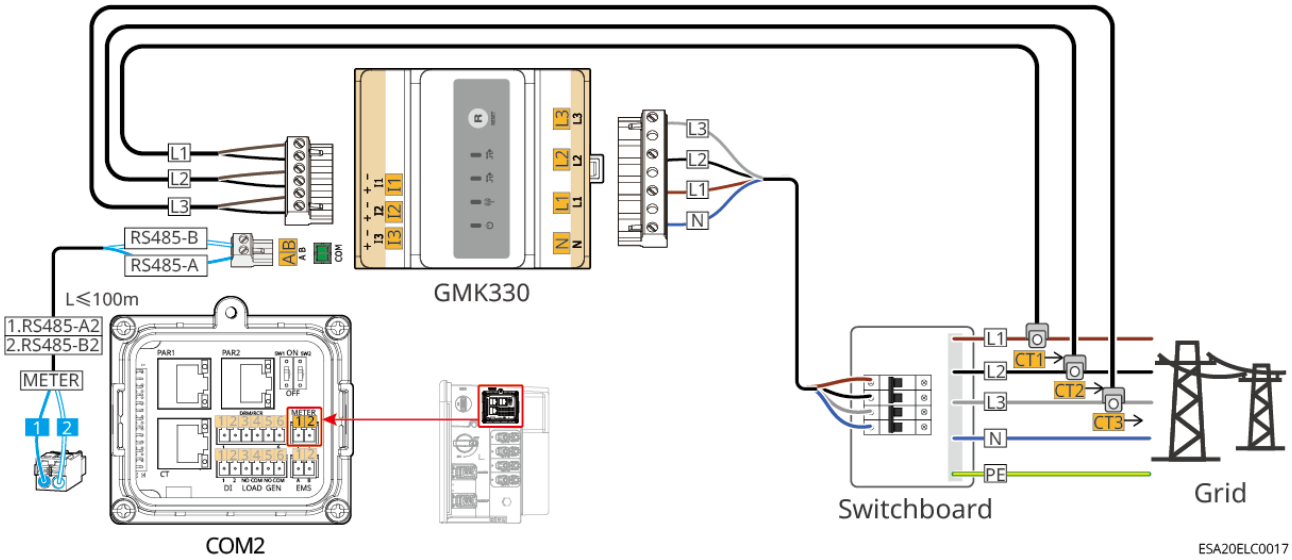

Wiring Steps

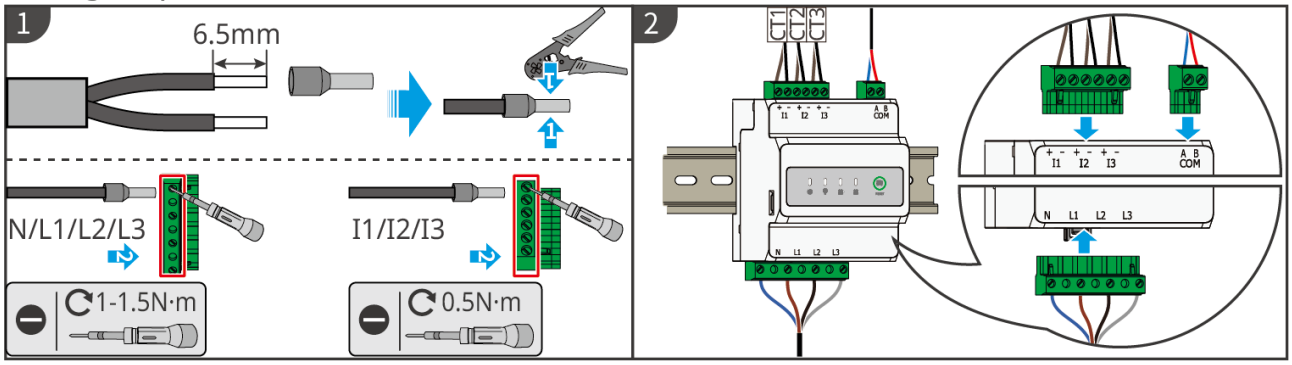

Install CT (Type One)

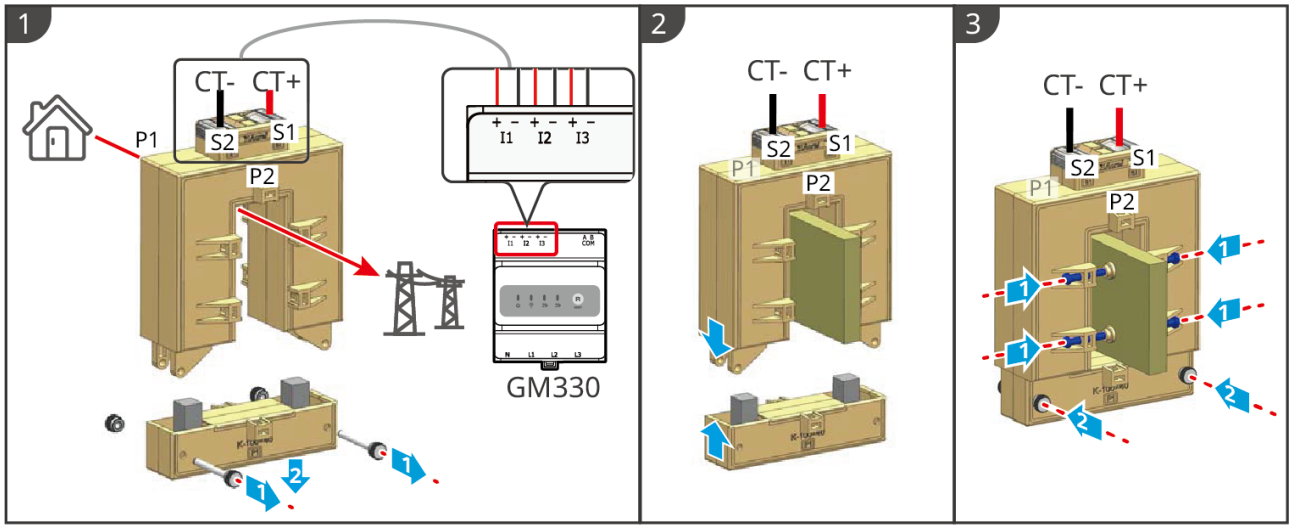

GMK10ELC0006

Install CT (Type Two)

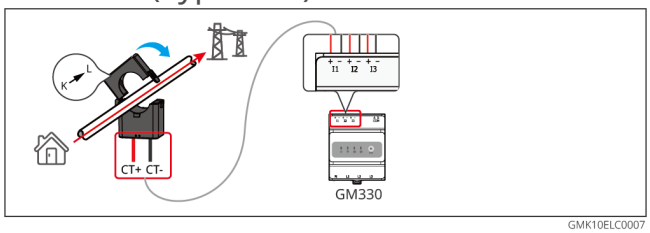

GMK10ELC0007

5.10 Connect communication cable

5.10.1 Connect inverter communication line

Note

- To ensure the electric meter and CT function properly, please ensure the following: CT must be correctly connected to the phase wire, CT1 is connected to L1, CT2 is connected to L2, CT3 is connected to L3.
- When using the inverter built-in meter, please use the CT shipped with the inverter.
- To use DRED, RCR, or the remote shutdown function, please enable it in the GoodWe SEMS+ App after completing the wiring.
- If the inverter is not connected to a DRED device or remote shutdown device, do not enable this function in the SEMS+ App, otherwise the inverter cannot operate on-grid.
- In a parallel system, to implement DRED and RCR functions, simply connect the DRED and RCR communication cables to the master inverter.
- To ensure the waterproof rating of the inverter, do not remove the waterproof plugs of unused communication ports on the inverter.
- Inverter DO Signal Communication Port, can connect dry contact signal specifications: Max≤24Vdc, 1A.
- Inverter communication function is optional; select based on actual use scenario.
- The inverter supports connection via Bluetooth, WiFi, and LAN communication methods to mobile devices or web interfaces for setting device parameters, viewing operation and error information, and promptly under standing system status.
- The inverter STS port should be connected to STS COM1. Connecting to CT is strictly prohibited, as it may cause equipment damage.
- In a single-machine system, it supports the installation of WiFi/LAN Kit-20 or 4G Kit-CN smart communication stick.
- In a parallel system, both the master and slave inverters need to be equipped with the WiFi/LAN Kit-20 intelligent communication stick for networking.
- In a parallel system, the DIP switches of the first and last inverters must be set to the ON position, while the other inverters should be set to the OFF position.

Communication Function Description

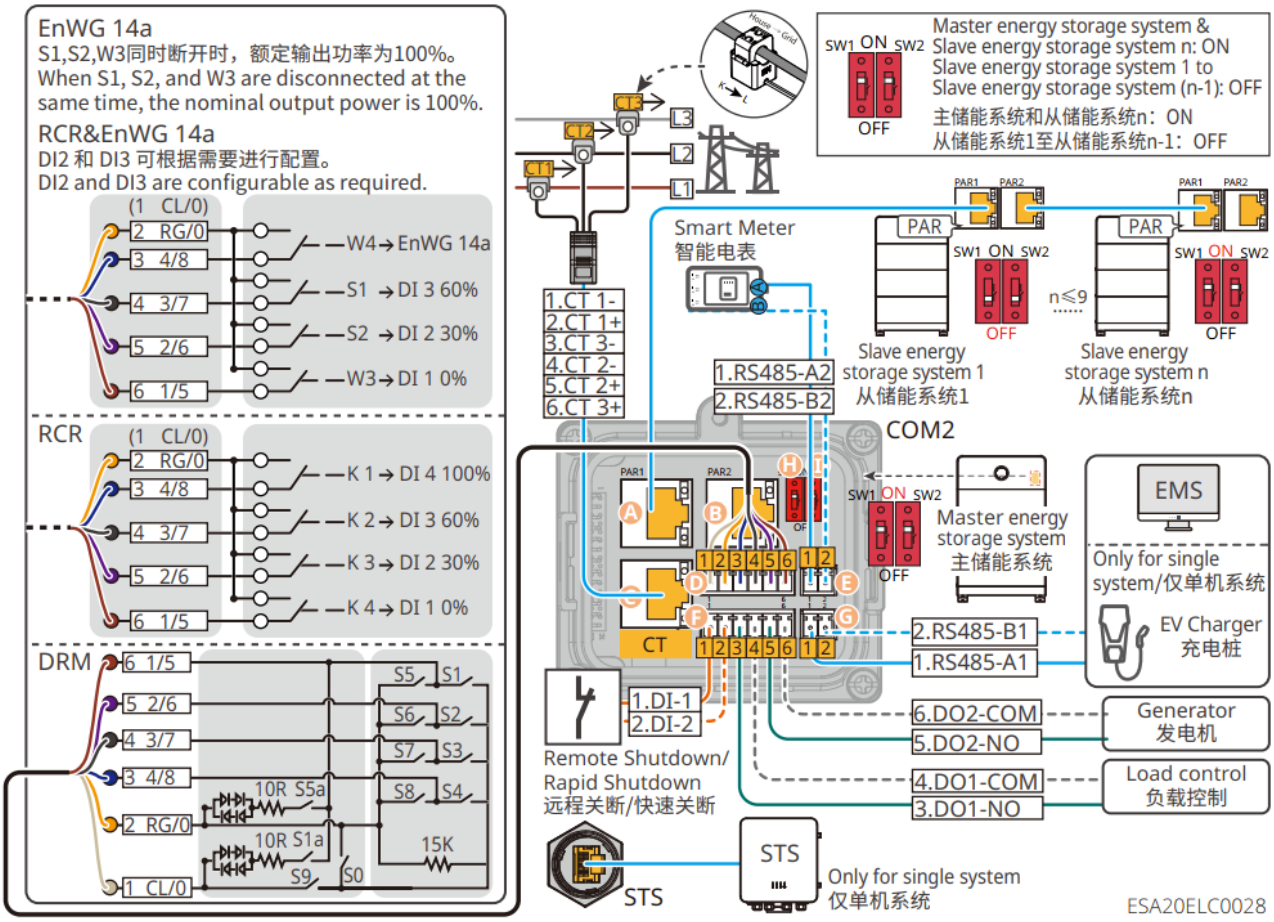

Port (Silkscreen)		function	description
A	PAR1	Parallel communication port 1	Parallel communication port.
B	PAR2	Parallel communication port 2	
C	CT	CT	When only using the inverter's built-in meter, connect the CT communication cable.

Port (Silkscreen)		function	description
D	DRM/RCR	RCR, DRED or EnWG 14a Function Connection Port	• RCR（Ripple Control Receiver）：Provides an RCR signal control port to meet the grid dispatching requirements in European regions. • DRED（Demand Response Enabling Device): provides DRED signal control port, meeting certification requirements for Australia and other regions DERD. • EnWG（Energy Industry Act）14a: All controllable loads must accept emergency grid dimming. Grid operators can temporarily reduce the maximum grid import power of controllable loads to 4.2kW.
E	METER	Meter connection port	Use RS485 communication to connect an external smart meter.
F	DI	Remote Shutdown/Rapid Shutdown	• External Remote Shutdown device, default off. • In a rapid shutdown system, the rapid shutdown transmitter works in conjunction with the receiver to achieve system rapid shutdown. The receiver maintains the module output by receiving signals from the transmitter. The transmitter can be external or built into the inverter. In an emergency, the external trigger device can be enabled to stop the transmitter, the reby shutting down the modules.

Port (Silkscreen)		function	description
	LOAD	load control	• Supports connection to dry contact signals, enabling load control and other functions. DO contact rating is 24 V DC@1A, NO/COM normally open contact. • Supports SG Ready heat pump integration, controlling the heat pump through dry node contact signals.
	GEN	Diesel Generator Control Port	Supports access to Diesel Generator Control signals to control the start/stop of the generator. In a Microgrid Scenario, connecting to a generator is not supported.
G	EMS	EMS/EV Charger Communication Port	• Connect to third-party EMS equipment for energy control • Only supports connecting to GoodWe charging piles in single-machine scenarios.
H	SW1	Parallel operation DIP switch	In a multi-machine parallel scenario, the parallel DIP switches of the first and last inverters need to be set to the ON position, and the other inverters to the OFF position.
I	SW2		

How to Connect the Communication Cable

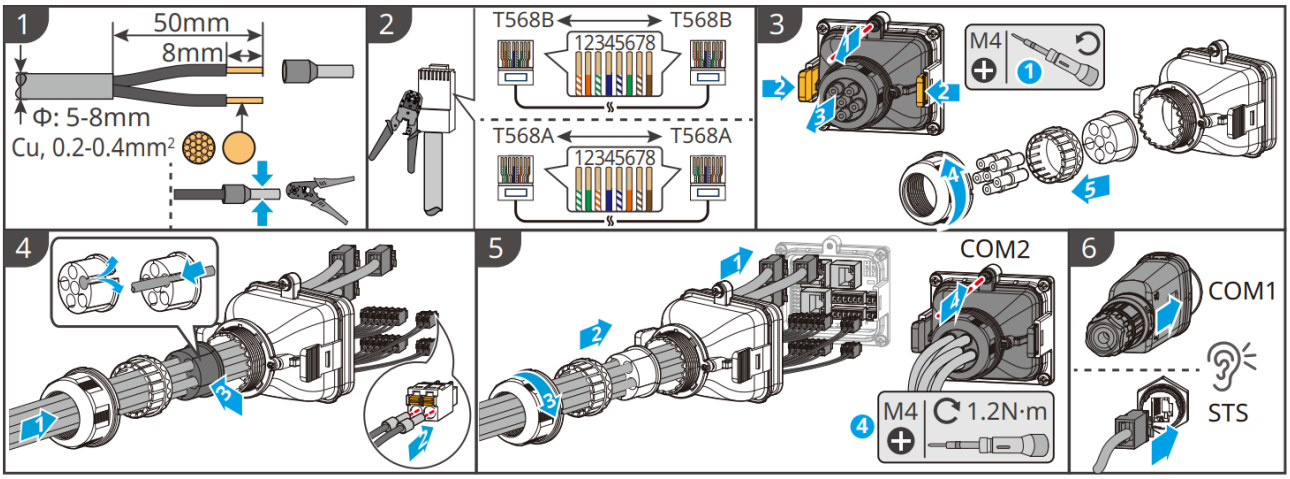

ESA20ELC0005

5.10.2 Connect the STS communication cable

Note

- When connecting the communication cable to the inverter, please use the communication cable shipped with the product.
- The length of the communication cable shipped with the box is 10m. If this length is insufficient, please prepare a standard network cable of CAT 5E or higher specification and use the RJ45 connectors shipped with the box to crimp the cable.
- The length of self-made communication cables should not exceed 100m, otherwise it may cause communication anomalies.
- When making a self-made communication cable, please cut off the communication cable shipped with the unit and take its waterproof grommet to install on the self-made cable.
- After the communication line connection is completed, please ensure waterproof Protection.
- COM2 port function reserved. Do not remove waterproof cover.

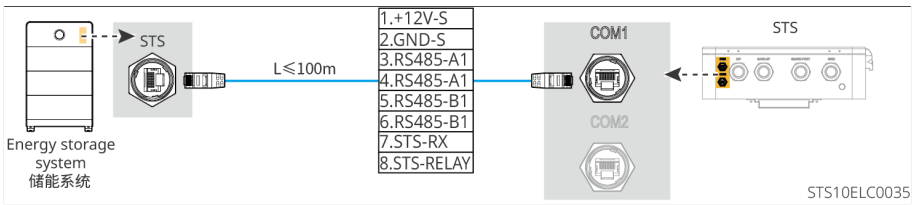

Figure45 Wiring Over view

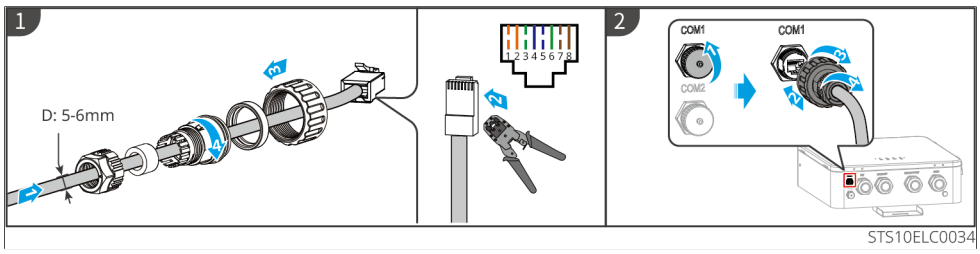

Figure46 Wiring steps

5.11 Installing the STS Cover Plate

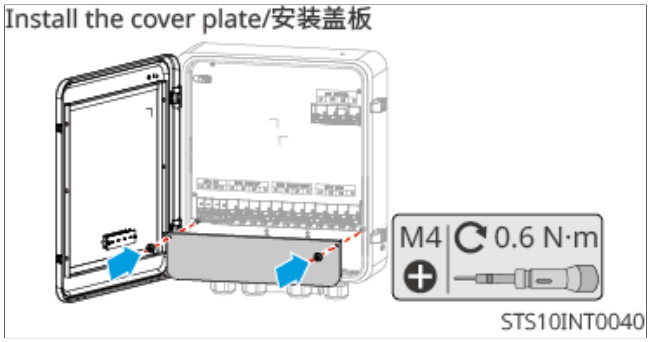
Install the cover plate/安装盖板
M4
0.6 N·m
STS10INT0040

6 System Commissioning

6.1 Check Before Power ON

No.	Inspection items
1	The equipment is firmly installed, easy to operate and maintain, with sufficient space for ventilation and heat dissipation, and the environment is clean and tidy.
2	PE cable, DC cables, AC cables, and Communication cable are correctly and securely connected.
3	The cable ties meet the wiring requirements, are reasonably distributed, and show no signs of damage.
4	Unused through-holes and port must be reliably connected using the provided terminal accessories and properly sealed.
5	Ensure that all used wire feed-through holes are properly sealed.
6	The voltage and Frequency of the Inverter on-grid access point comply with the on-grid requirements.

6.2 Power ON

⚠WARNING

- Battery black start: When there is no PV power generation in the photovoltaic system and the grid is abnormal, if the inverter cannot work normally, the battery black start function can be used to force the battery to discharge and start the inverter. The inverter can then enter off-grid mode and the battery supplies power to the load.
- After the battery system is started, ensure that the inverter and the battery system communicate normally within 15 minutes. If the inverter and the battery system cannot communicate properly, the battery system switch will automatically disconnect and the battery system will be powered off.
- When the inverter is operating normally, set the manual transfer switch to the BACK-UP position to engage, and the inverter's BACK-UP port supplies power to the load.
- PV strings and "5" are only applicable to the ETA series.

NOTICE

- On the first power-up of the system, it is recommended to perform a battery black start. Close the battery power switch and briefly press the multifunction button on one of the batteries. Observe whether the inverter SOC indicator lights up. If the indicator lights up, the battery is connected properly, and you can proceed to close the DC switch of the subsequent inverter.
- To ensure successful networking of the parallel system, it is recommended to complete the power-on and detection operations in the following order:
  - Before the parallel system networking is successful, do not close the grid-side switch, to avoid the machine starting Grid wiring detection before configuration is complete, which may cause detection timeout.
  - For pure grid-tied parallel operation (i.e., the backup outputs of all machines are not connected to any load), before the parallel system networking is successful, it is recommended to power the inverters only through a single PV string or a single battery string, to avoid the master inverter starting off-grid and entering wiring detection before other machines are configured, which may cause detection timeout.

power on

- **Standalone scenario**

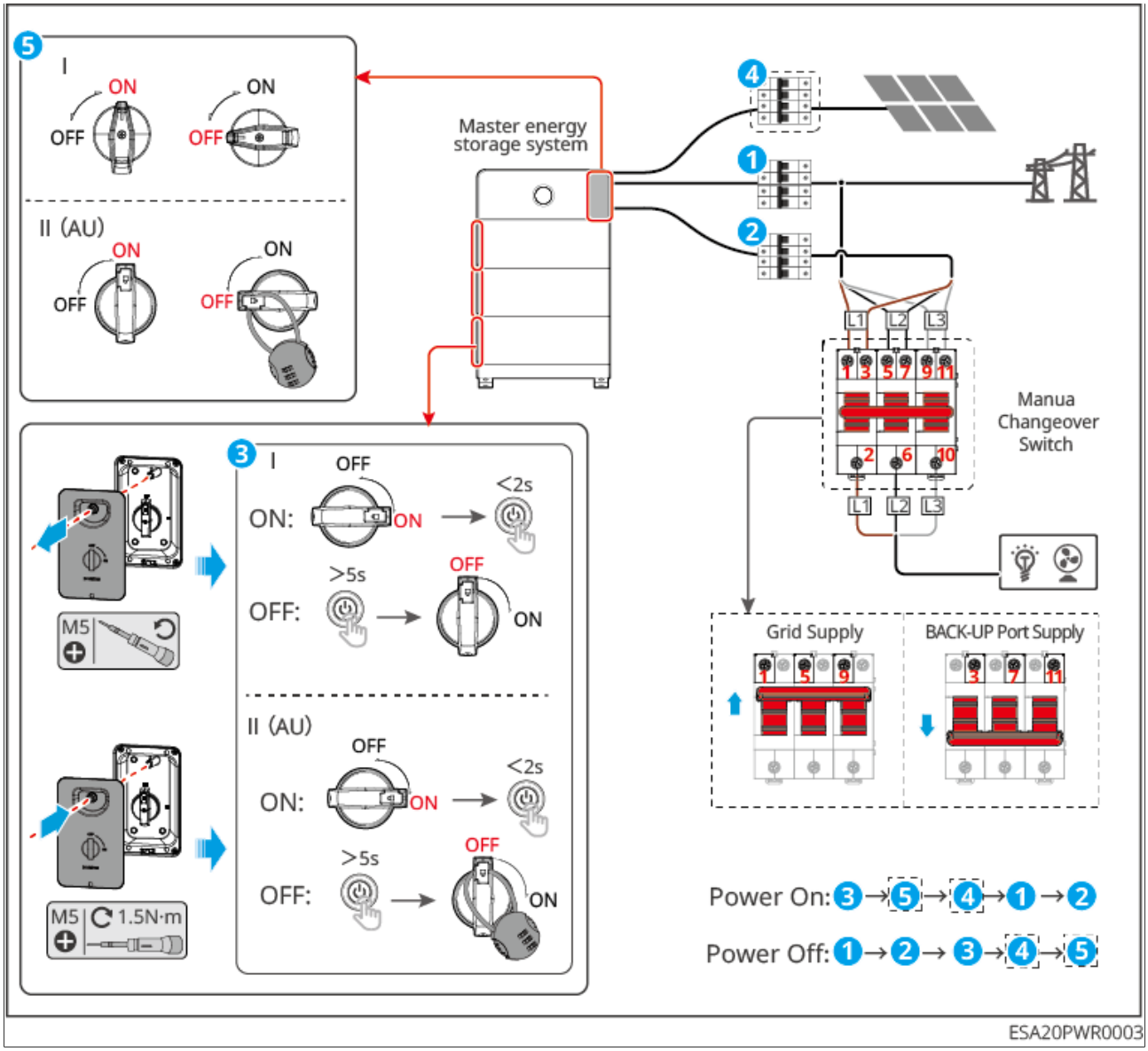

Figure47 Power on for standalone scenario

1. Close the battery power switch and briefly press the battery's multi-function button. When there are multiple batteries in the system, close the power switches of all batteries. Briefly press the multi-function button of any battery to start all batteries.
2. Close the DC switch of the inverter.
3. Close the circuit breaker between the PV modules and the inverter.
4. Close the GRID circuit breaker.

5. Set the manual transfer switch to the BACK-UP position to engage, so that the BACK-UP port supplies power to the load. Close the BACK-UP circuit breaker.

Power on with static transfer switch cabinet

During inverter shutdown maintenance, if the STS BACK-UP port load needs to remain powered, close the BYPASS switch so that the mains directly supplies power to the load.

⚠DANGER

- Please be sure to operate according to the BYPASS switch closing sequence, otherwise there may be a risk of electric shock.
- When the BYPASS switch is closed, QF1 must be disconnected; otherwise there may be a risk of electric shock.
- After the switch switching is completed, please close the cabinet door.
- Do not discard the retaining clip.

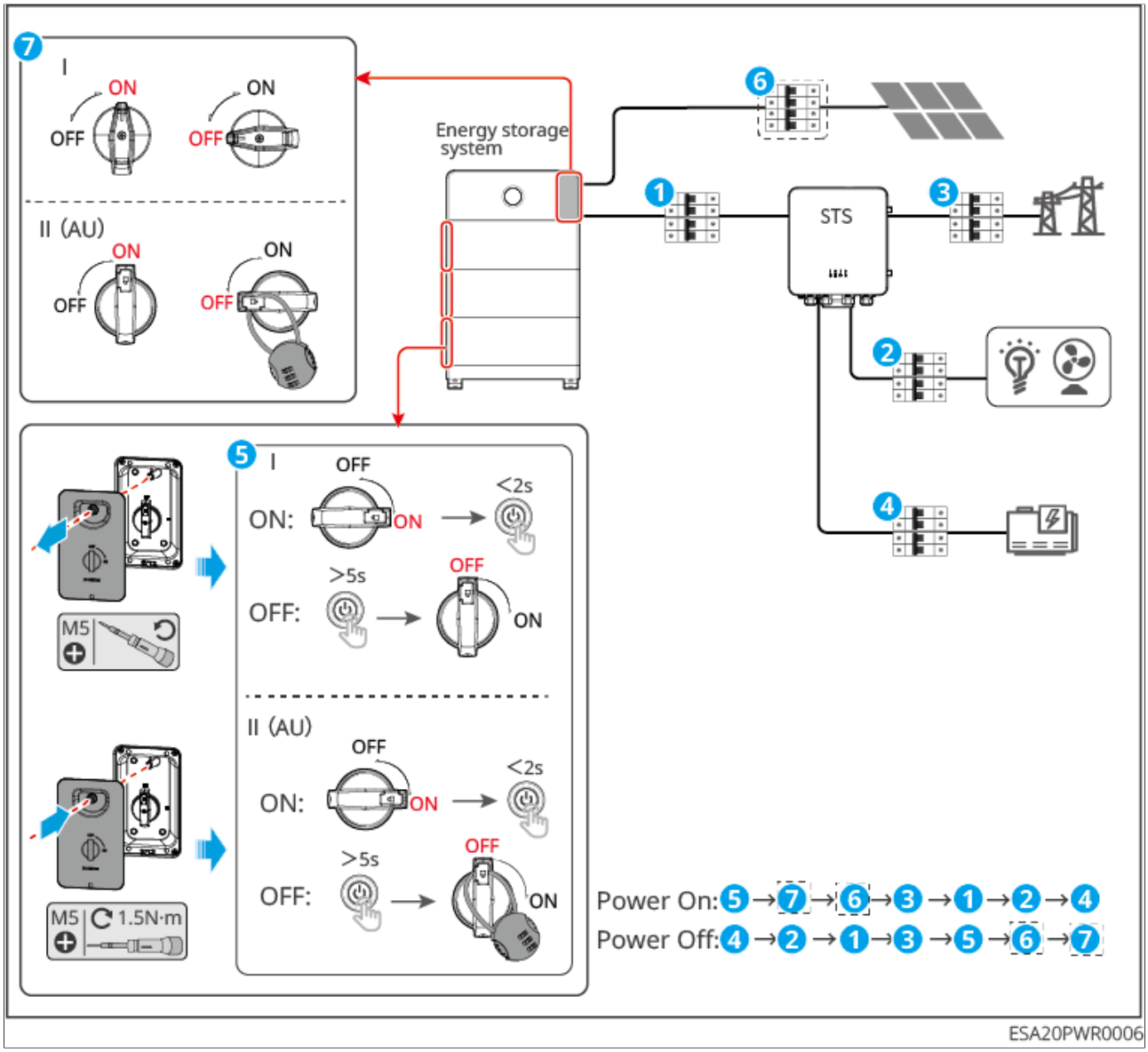

Figure48 Power on with static transfer switch cabinet

1. Close the battery power switch and briefly press the battery's multi-function button. When there are multiple batteries in the system, close the power switches of all batteries. Briefly press the multi-function button of any battery to start all batteries.
2. Close the DC switch of the inverter.
3. Close the circuit breaker between the PV modules and the inverter.
4. Close the STS GRID circuit breaker.
5. Close the STS INV circuit breaker.
6. Close the STS BACK-UP circuit breaker.

7. Close the STS SMART-PORT circuit breaker.

STS BYPASS switch closed

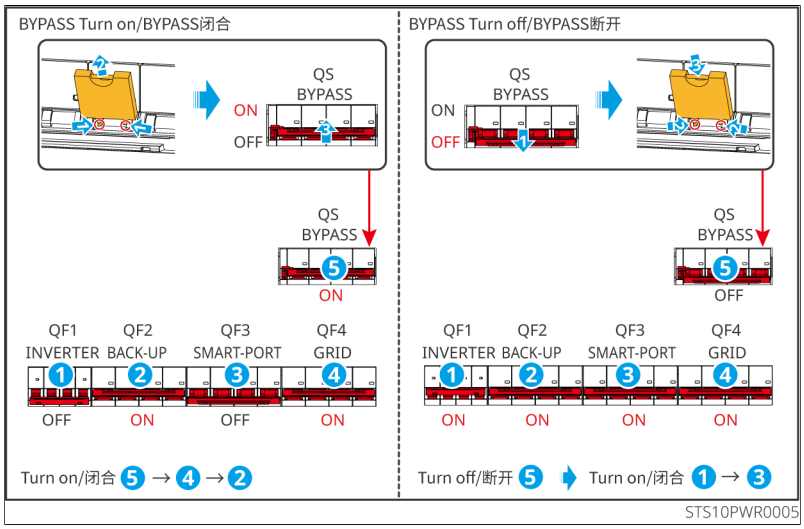

Figure49 BYPASS switch closed

1. Open all circuit breakers: QF1−QF4 open, QS1 open and locked out
2. Power off the inverter and wait 5 minutes.
3. Keep QS1 open and locked → remove the retaining clip → close QS1
4. Operate QS1 to the retaining clip lock position, keep it engaged and locked.
5. Close the GRID circuit breaker QF4.
6. Close the BACK-UP circuit breaker QF2.

- **parallel system**

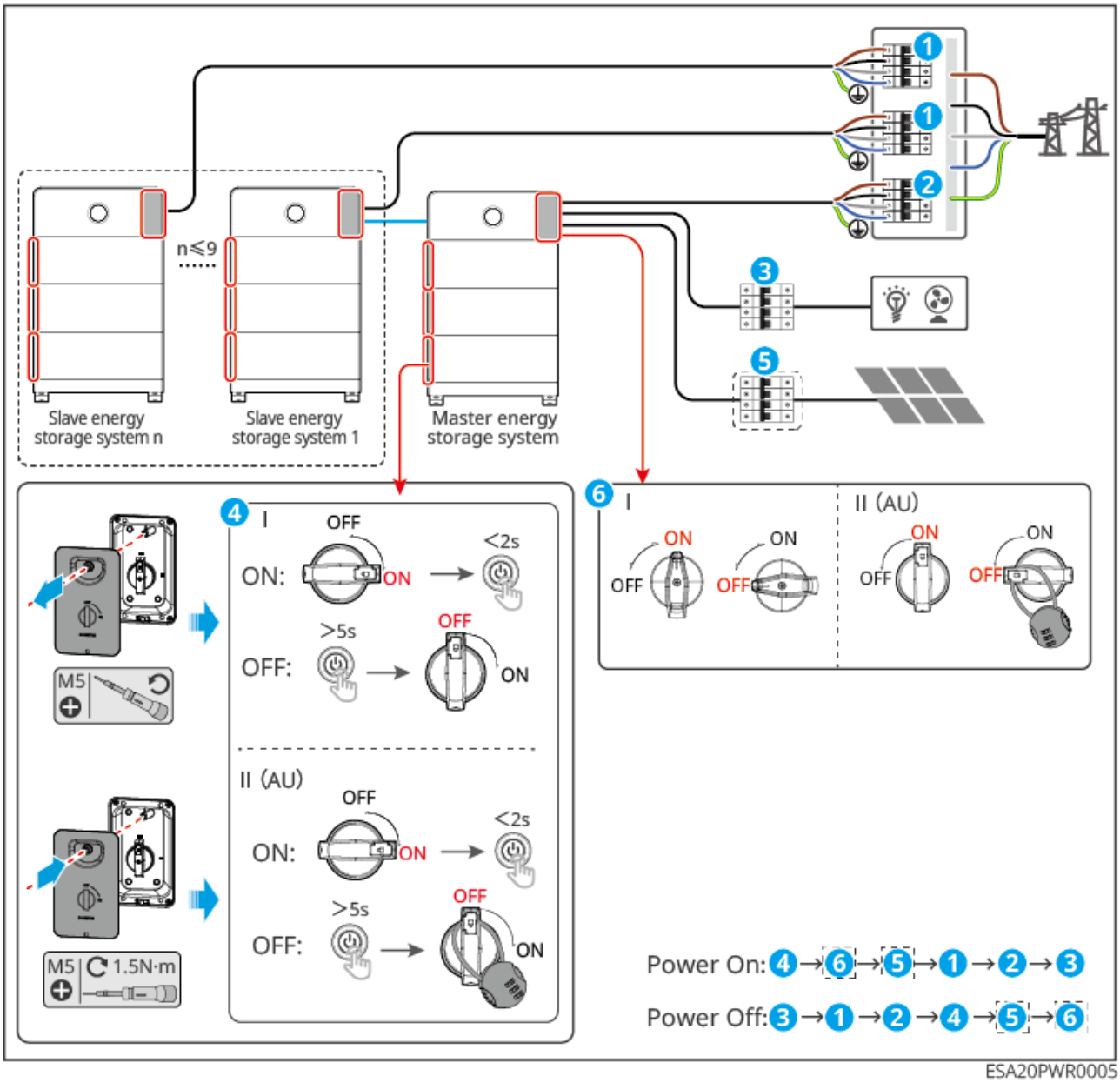

1. Close the battery power switch and briefly press the battery's multi-function button. When there are multiple batteries in the system, close the power switches of all batteries. Briefly press the multi-function button of any battery to start all batteries.
2. Close the DC switch of the inverter.
3. (Optional) Close the circuit breaker between the PV modules and the inverter.
4. Close the slave inverter GRID circuit breaker.
5. Close the master inverter GRID circuit breaker.
6. Close the BACK-UP circuit breaker.

Battery black start

1. Close the battery power switch. When there are multiple batteries in the system, close the power switches of all batteries.
2. Close the DC switch of the inverter.
3. (Optional) Close the circuit breaker between the PV modules and the inverter.
4. Close the GRID circuit breaker.
5. Close the BACK-UP circuit breaker.
6. Briefly press the multi-function button of any battery to start the battery. After the battery is powered on, wait 15 seconds, then press and hold the multi-function button of any battery for 2 seconds; the battery will forcibly discharge to activate the inverter.

6.3 Installing the Protective Cover

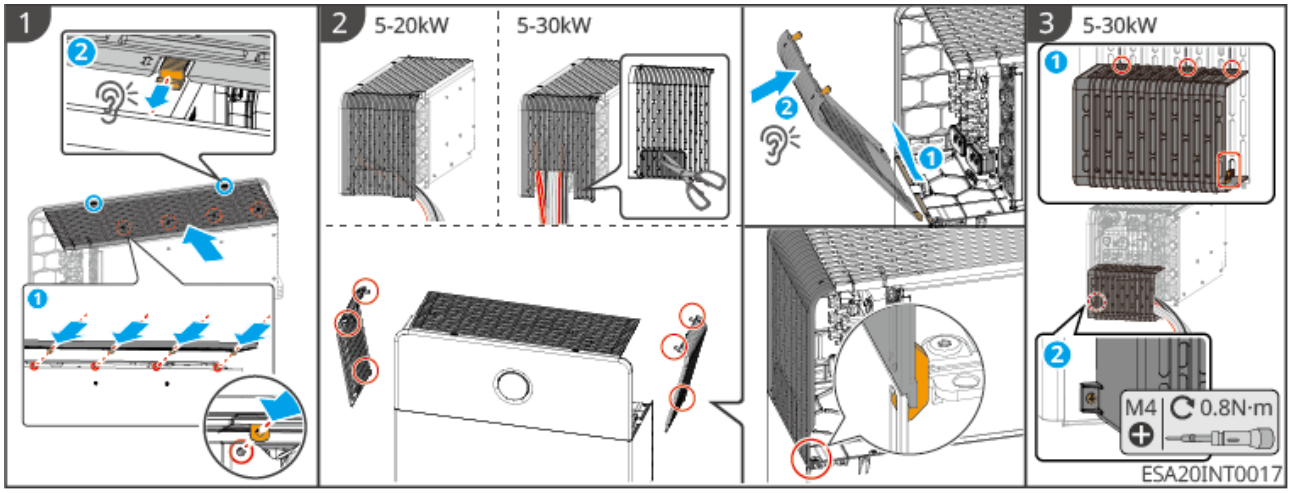

Step 1: Install the inverter top cover. Align the cover with the installation slot on the top of the inverter and slide it forward.
Step 2: Install the side cover. Place the side cover into the slot on the side of the battery and push it forward.
Step 3: (Optional) If using side cable routing, install the cable cover.

6.4 Indicators

6.4.1 Inverter Indicators

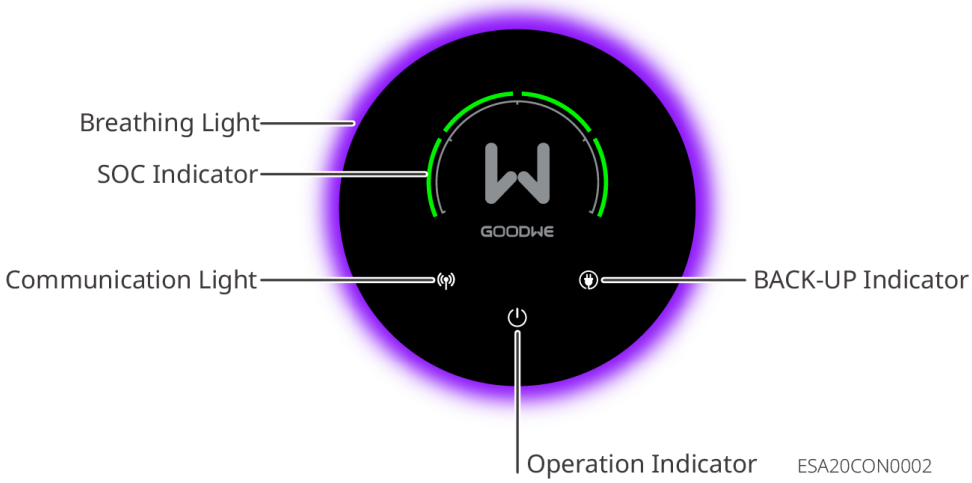

Breathing Light:

- When the system is in an upgrade state: The Breathing Light is a green marquee light; the head of the marquee is brightest and the tail is dimmest. The length of the marquee and the upgrade percentage are influenced by the SEMS+ App settings and the device's operational status.
- Except during inverter upgrades, system faults, and inverter power-off states, the Breathing Light status is affected by the App settings in the SEMS+ App. For setup instructions, please refer to the SEMS+ App User Manual.

Indicator	Indicator Status	Breathing Light Status	Description
		• 3min/Always On: Blue-purple chasing light stays on • Always Off: Off	Inverter is powered on and in standby mode
			Inverter is starting up and in self-test mode
		• 3min: Blue-purple breathing for 3min then off • Always On via App: Blue-purple breathing stays on • Always Off via App: Off	Inverter operating normally in grid-tied generation or off-grid mode

Indicator	Indicator Status	Breathing Light Status	Description
		Red flashing	System fault
		Off	Inverter is powered off
		/	Inverter monitoring module resetting
			No connection established between inverter and communication terminal
			Communication fault between communication terminal and cloud server
			Inverter monitoring normal
			Inverter monitoring module not started
			Grid abnormal, inverter BACK-UP port power supply normal
			Grid normal, inverter BACK-UP port power supply normal
			No power supply to BACK-UP port
			System upgrade
			System fault

Indicator	Indicator Status	Breathing Light Status	Description
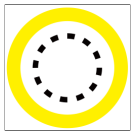			System overload
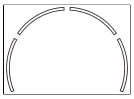	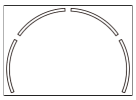		Battery has no charge
	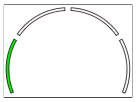		Steady on: Charge Flashing: Discharge Battery SOC: 0% < SOC≤25%
	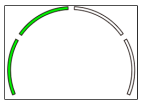		Steady on: Charge Flashing: Discharge Battery SOC: 25% < SOC≤50%
	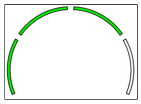		Steady on: Charge Flashing: Discharge Battery SOC: 50% < SOC≤75%
	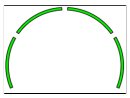		Steady on: Charge Flashing: Discharge Battery SOC: 75% < SOC≤100%

6.4.2 Battery Indicators

Button Indicators

No.	Green Light	Red Light	Battery System Status	Description
1	Steady On	--	System Operating Normally	Run
2	Blinking 1 time/S		System Ready	Standby
	Blinking 3 times/S	--	PCS Communication Lost	--
3	Blinking 1 time/2S	--	System Alarm	Includes Level 2 faults from the fault list, where the under-voltage fault is steady on when it is Level 2, 3, or 4.
4	--	Steady On	System Fault	Level 3 and above faults from the fault list (steady on when under-voltage fault is Level 5).

6.4.3 STS indicator light

indicator light	status	Description
		Grid port voltage normal
		No voltage at grid port
		Backup port voltage normal
		Backup port has no voltage.
		SMART-PORT port voltage normal
		No voltage at SMART-PORT.
		Equipment failure
		Equipment fault-free

6.4.4 Smart Meter Indicator Lights GM330&GMK330

6.4.4.1 Indicator Light Description

Type	Status	Description
Power Light	Steady On	The meter is powered on, with no RS485 communication.
	Blinking	The meter is powered on, with normal RS485 communication.
	Off	The meter is powered off.
Comm Light	Off	Reserved.
	Blinking	Press and hold the Reset button for ≥5s, and the Power Light and Buy/Sell Power Light blink: The meter is resetting.
Buy/Sell Power Light	Steady On	buy power from the grid.
	Blinking	Selling power to the grid.
	Off	Not buying or selling power.
Buy/Sell Power Light (GMK360 only)	Steady On	buy power from the grid.
	Blinking	Selling power to the grid.
	Off	Not buying or selling power.

6.4.5 Smart Dongle Indicator

- **WiFi/LAN Kit-20**

NOTICE
• After double-clicking the Reload button to turn on Bluetooth, the communication indicator light will switch to a single-blink state. Please connect to the App within 5 minutes, otherwise Bluetooth will automatically turn off. • The communication indicator light's single-blink state only appears after double-clicking the Reload button to turn on Bluetooth.

Indicator	Status	Description
Power Light		Constantly lit: The Smart Communication Stick is powered on.
		Off: The Smart Communication Stick is not powered on.
Communication Light		Constantly lit: Communication is normal in WiFi mode or LAN mode.
		Single flash: The Smart Communication Stick's Bluetooth signal is enabled, waiting to connect to the App.
		Two flashes: The Smart Communication Stick is not connected to the router.
		Four flashes: The Smart Communication Stick communicates normally with the router, but is not connected to the server.
		Six flashes: The Smart Communication Stick is identifying connected devices.
		Off: The Smart Communication Stick is undergoing a software reset or is not powered on.

Indicator	Color	Status	Description
LAN port communication light	Green	Steady on	100Mbps wired network connection is normal.
		Off	• Network cable is not connected. • 100Mbps wired network connection is abnormal. • 10Mbps wired network connection is normal.
	Yellow	Steady on	10/100Mbps wired network connection is normal, with no communication data being transmitted or received.
		Blinking	Communication data is being transmitted or received.
		Off	Network cable is not connected.

Button	Description
Reload	Hold for 0.5~3 seconds, the Smart Communication Stick will reset.
	Hold for 6~20 seconds, the Smart Communication Stick will restore factory settings.
	Double-click quickly to enable Bluetooth signal (maintained for 5 minutes only).

- **4G Kit-G20**

Indicator	Status	Description
Power Light		Steady on: The Smart Communication Stick is powered on.
		Off: The Smart Communication Stick is not powered on.
Communication Light		Steady on: The Smart Communication Stick is connected to the server, communication is normal.
		Blinks twice: The Smart Communication Stick is not connected to the base station.
		Blinks four times: The Smart Communication Stick is connected to the base station but not to the server.
		Blinks six times: Communication between the Smart Communication Stick and the inverter is disconnected.
		Off: The Smart Communication Stick is undergoing a software reset or is not powered on.
Button	Description	
Reload	Hold for 0.5~3 seconds, the Smart Communication Stick will restart.	
	Hold for 6~20 seconds, the Smart Communication Stick will restore factory settings.	

7 System Debugging and Power Station Monitoring

7.1 Device commissioning and plant monitoring via the SEMS+ App

The SEMS+ App is software for remote plant monitoring or near-end device commissioning. It supports installers or plant owners in:

- Remotely monitoring plant operation and setting plant and device operating parameters.
- Connecting to devices locally to view their operating status and set device parameters.

Downloading and installing the SEMS+ App

Phone requirements:

- Mobile operating system requirements: Android 7.0 or later, iOS 15.1 or later.
- The phone supports a web browser and can connect to the Internet.
- The phone supports WLAN/Bluetooth.

Download methods:

Method 1:

Search for SEMS+ in the Google Play, App Store, Huawei, Honor, Xiaomi, OPPO, and vivo app stores to download and install it.

SEMS0163

Method 2:

Scan the following QR code to download and install it.

SEMS0164

For detailed functions, see the SEMS+ App User Manual. The user manual can be obtained from the official website or by scanning the following QR code.

SEMS+ App User Manual

7.2 Perform device commissioning and power station monitoring via SEMS+ WEB

SEMS+ WEB is a monitoring platform that can communicate via WiFi or LAN. The following are common functions of SEMS+ WEB:

1. Manage organization or user information, etc.
2. Adding, monitoring power station information, etc.
3. Maintain equipment.

For detailed functions, please refer to SEMS+ WEB User Manual.

SEMS+ WEB User Manual

8 Maintenance

8.1 Power OFF the System

⚠DANGER

- When performing operation and maintenance on equipment in the system, power off the system. Operating equipment with power on may cause equipment damage or electric shock hazard.
- After the equipment is powered off, it takes some time for internal components to discharge. Wait until the equipment is fully discharged according to the label time requirements.
- To restart the battery, use the air switch power-on method.
- When powering off the inverter for maintenance, ensure STS QF1 INV is disconnected; otherwise there may be risk of electric shock.
- When shutting down the battery system, strictly follow the battery system power-off requirements to prevent damage to the battery system.

⚠WARNING

When the inverter is powered off for maintenance or due to a fault, to ensure normal operation of the load, switch the manual transfer switch to the grid side and close it, so that the grid supplies power to the load.

NOTICE

- To ensure effective protection of the battery system, keep the cover of the battery system switch closed. If the battery system switch is not used for a long time, fasten it with screws.
- When the circuit breaker is open, all live parts in the positive and negative circuits are disconnected, and the equipment is in a safe power-off state with no exposed hazardous live parts, so there is no risk of electric shock upon human contact.
- If the system is equipped with a static transfer switch cabinet (STS), close the upper cover of the STS after power-off is completed.
- The PV strings and "❺" are only applicable to the ETA series.

power off

- **Single-unit scenario:**

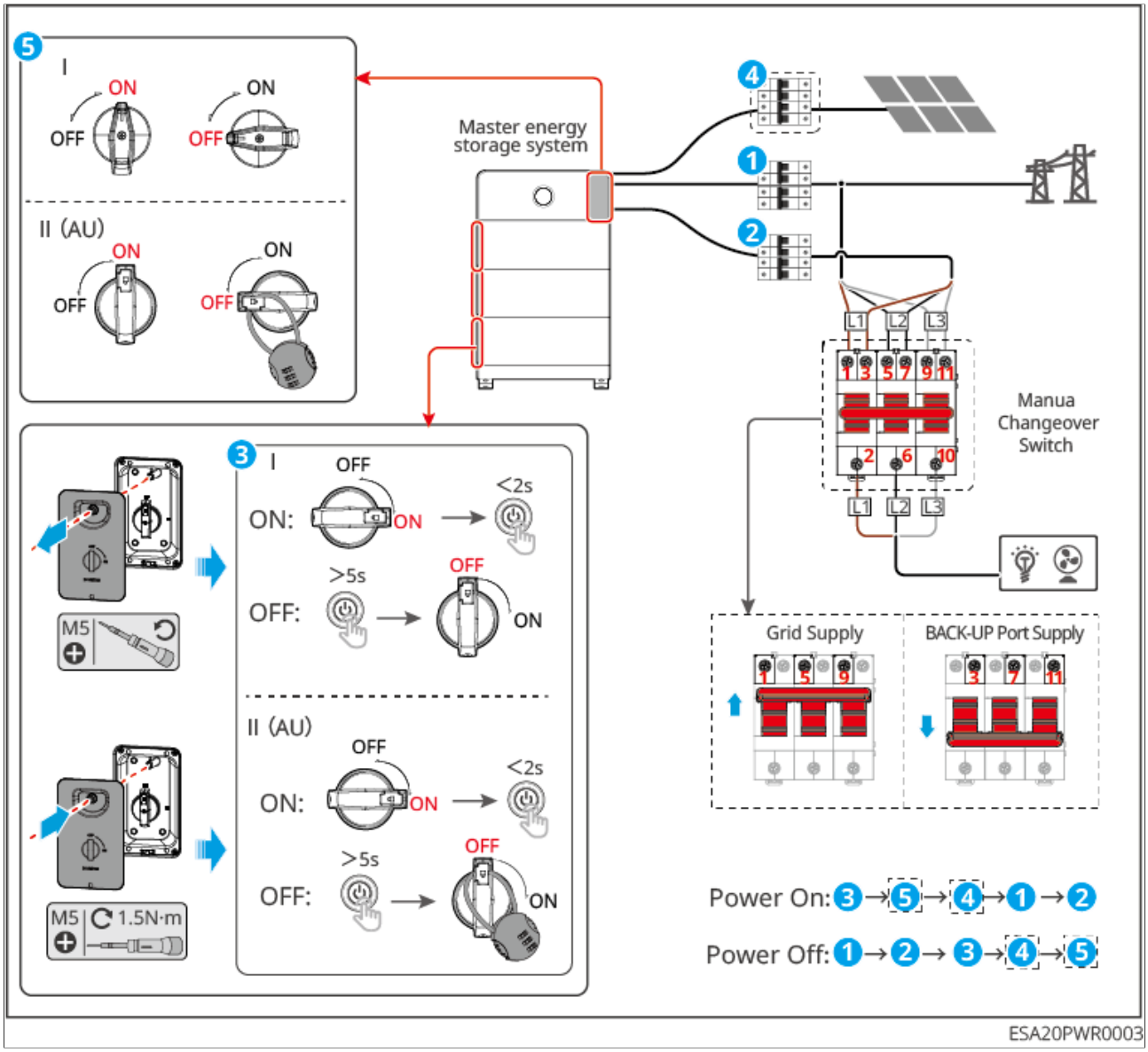

Figure50 Single-unit scenario power off

1. Disconnect the BACK-UP circuit breaker.
2. Disconnect the GRID circuit breaker.
3. Press and hold the multi-function button on any battery for 5 seconds to power off the battery system. If the system contains multiple batteries, this operation will power off all batteries without the need to operate them one by one. Finally, turn off the battery system switch.
4. (Optional) Disconnect the circuit breaker between the PV components and the inverter.
5. Disconnect the inverter DC switch. Turn the manual transfer switch to the grid side

to close, and the grid supplies power to the load.

Power off with static transfer switch cabinet

After the inverter is powered on and resumes operation, open the BYPASS switch, and the load switches back to inverter power supply.

⚠DANGER

- Be sure to operate according to the BYPASS switch disconnection sequence; otherwise, there may be a risk of electric shock.
- When the BYPASS switch is closed, STS QF1 INV must be disconnected; otherwise, there may be a risk of electric shock.
- Do not discard the retaining ring.

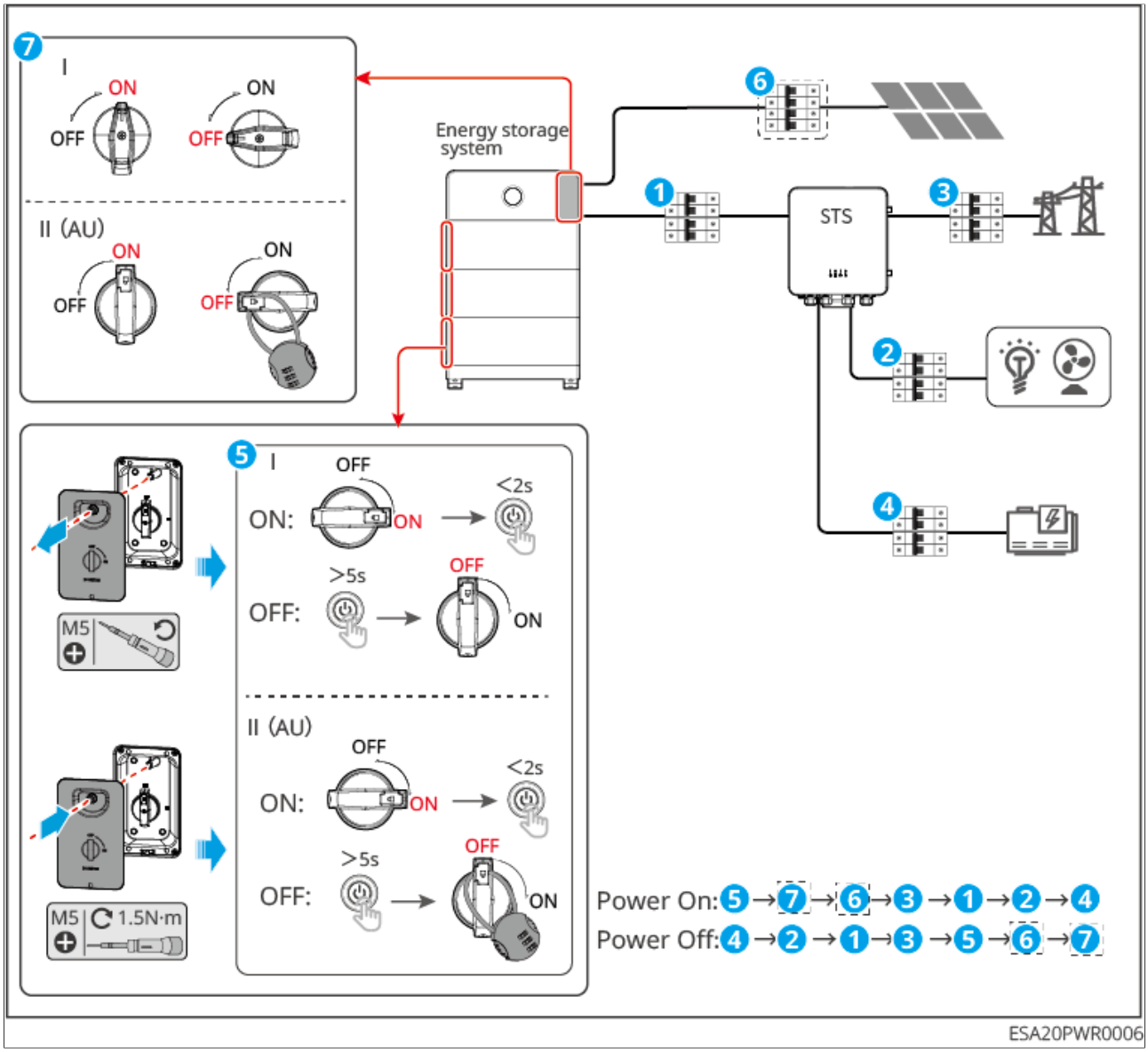

Figure51 Power off with static transfer switch cabinet

1. Disconnect the STS SMART-PORT circuit breaker.
2. Disconnect the STS BACK-UP circuit breaker.
3. Disconnect the STS INV circuit breaker.
4. Disconnect the STS GRID circuit breaker.
5. Press and hold the multi-function button on any battery for 5 seconds to power off the battery system. If the system contains multiple batteries, this operation will power off all batteries without the need to operate them one by one. Finally, turn off the battery system switch.
6. (Optional) Disconnect the circuit breaker between the PV components and the

inverter.

7. Disconnect the inverter DC switch.

Disconnect the STS BYPASS switch

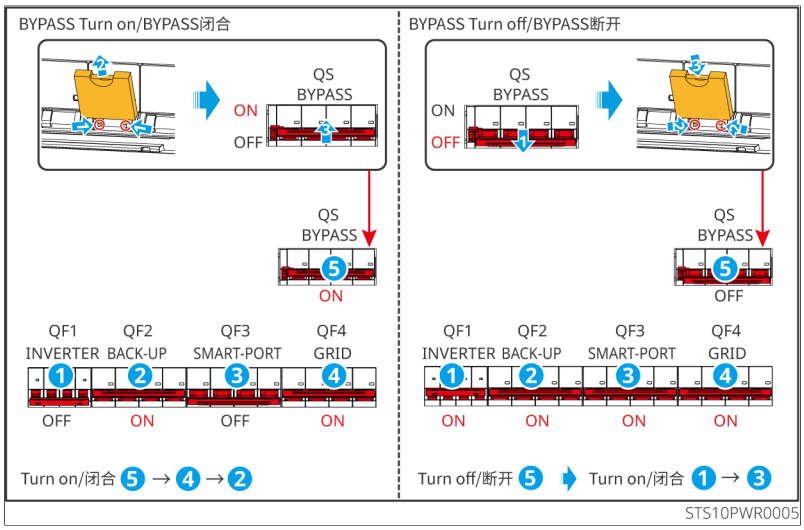

Figure52 **BYPASS switch open**

1. Current status: GRID bypass power supplies BACK-UP; QF3, QF1 open; QF4, QF2, QS1 closed
2. Open QS1 → Use the spring clip to place QS1 in the locked state (to prevent misoperation)
3. Open QF4, QF2: At this point, QF1-QF4 and QS1 are all open
4. Power on the inverter
5. Refer to the power-on sequence and close QF1-QF4 sequentially

- **parallel system:**

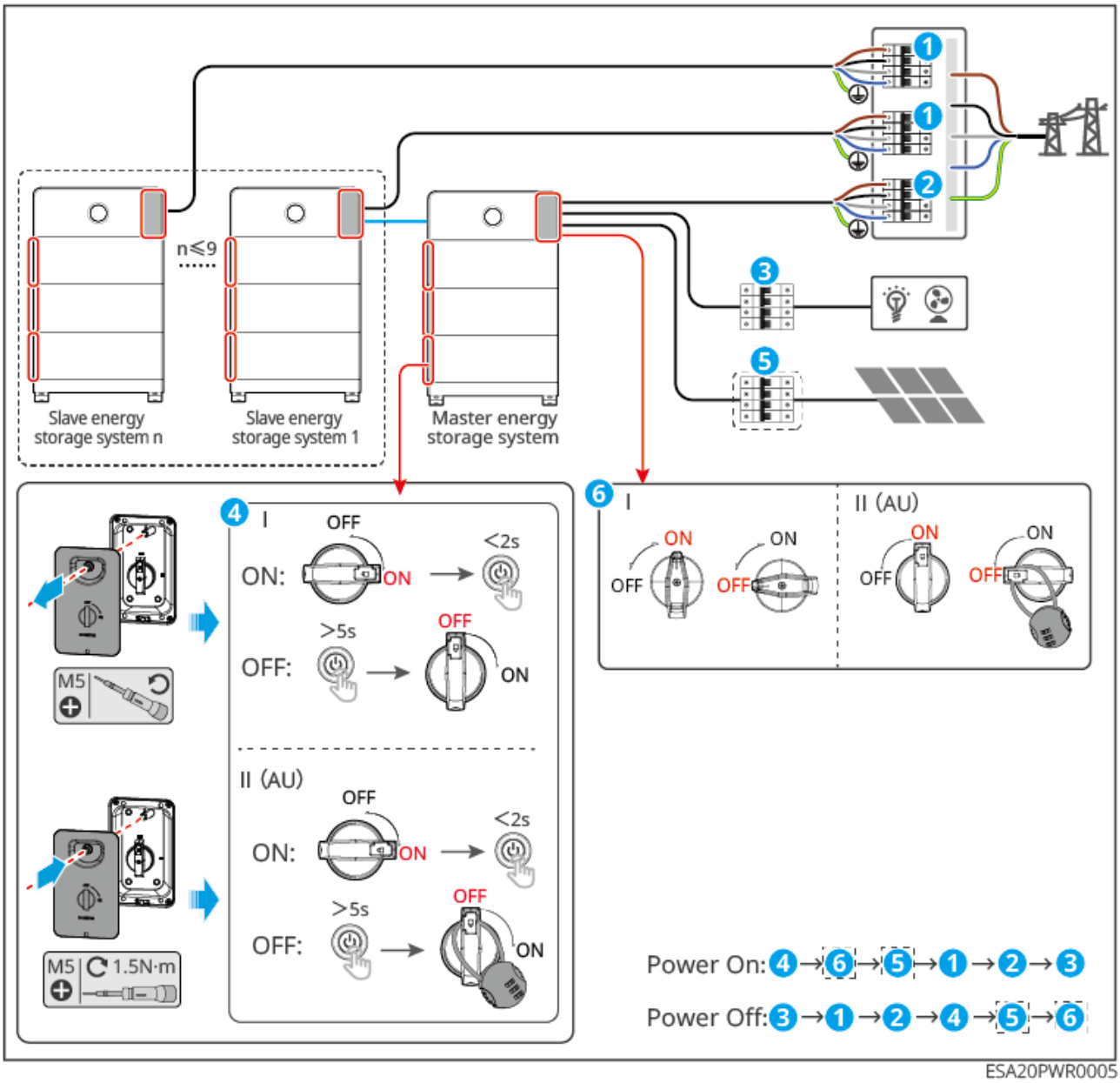

1. Disconnect the BACK-UP circuit breaker.
2. Disconnect the slave inverter GRID circuit breaker.
3. Disconnect the master inverter GRID circuit breaker.
4. Press and hold the multi-function button on any battery for 5 seconds to power off the battery system. If the system contains multiple batteries, this operation will power off all batteries without the need to operate them one by one. Finally, turn off the battery system switch.
5. (Optional) Disconnect the circuit breaker between the PV components and the inverter.
6. Disconnect the inverter DC switch.

8.2 Removing the Equipment

⚠DANGER

- Ensure the device is powered off.
- When operating the device, please wear personal protective equipment.
- When removing wiring terminals, use standard disassembly tools to avoid damaging the terminals or device.
- Unless otherwise specified, the device disassembly method is the reverse order of the installation method, and this document will not elaborate further.

1. Power down the system.
2. Label the cables connected in the system to indicate their types.
3. Disconnect the cables from the Inverter, Battery, and smart meter in the system, such as DC cables, AC cables, Communication cable, and PE cable.
4. Remove equipment such as the smart communication stick, Inverter, Battery, and smart meter.
5. Store the equipment properly. If it will be put into use again later, ensure the storage conditions meet the requirements.

8.3 Disposing of the Equipment

When the equipment can no longer be used and needs to be disposed of, please handle it according to the electrical waste disposal requirements of the regulations in the country/region where the equipment is located. The equipment must not be disposed of as general household waste.

8.4 Routine Maintenance

⚠WARNING

- If any issues that may affect the Battery or hybrid inverter system are discovered, please contact after-sales personnel. Unauthorized disassembly is strictly prohibited.
- If exposed copper wires are found inside the conductive line, do not touch them. High voltage DANGER, please contact after-sales personnel. Unauthorized disassembly is prohibited.
- In case of any other emergencies, please contact the after-sales personnel immediately. Follow their instructions for operation or wait for on-site assistance from the after-sales team.

Maintenance Content	Maintenance method	Maintenance cycle	Maintenance purpose
System cleaning	Check for any foreign objects or dust in the heat sink and air inlet/outlet. Check if the Installation space meets the requirements, and inspect whether there is any debris accumulation around the equipment.	Once every six months	Prevent heat dissipation.
System Installation	Check whether the equipment Installation is secure and whether the fasteners screw are loose. Inspect the equipment for any damage or deformation on the exterior.	Once every six months to once a year	Verify the stability of the Installation equipment.
Electrical connection	Check for loose electrical connections, damaged cable insulation, or exposed copper conductors.	Once every six months to once a year	Verify the reliability of electrical connections.

Maintenance Content	Maintenance method	Maintenance cycle	Maintenance purpose
fan	Check if the fan has any abnormal noise; Check the fan blades for cracks; Check if the fan has abnormal blockage or stalling;	1 time/half year	Prevent fan fault.
Sealing	Check whether the cable entry hole Sealing of the equipment meets the requirements. If the gap is too large or unsealed, resealing is required.	Once per year	Verify that the machine's sealing and waterproof performance are intact.
Battery maintenance	If the Battery has not been used or fully charged for a long time, it is recommended to perform Charge on the Battery regularly.	Once/15 days	ProtectionBattery service life.

Fan maintenance can be specifically referred to the following steps:
There is a fan module on the exterior of Inverter. To clean the fan module more effectively, remove it from the machine before cleaning. The specific steps are as follows:

1. Inverterpower off, refer to8.1.Power OFF the System(Page 184).
2. Wait for the residual voltage in the system to be fully discharged and the fan module to completely stop operating.
3. Use screwdriver dismantle module to lock screw, and remove the entire fan module.
4. Clean the fan using a soft brush, cloth, or vacuum cleaner.

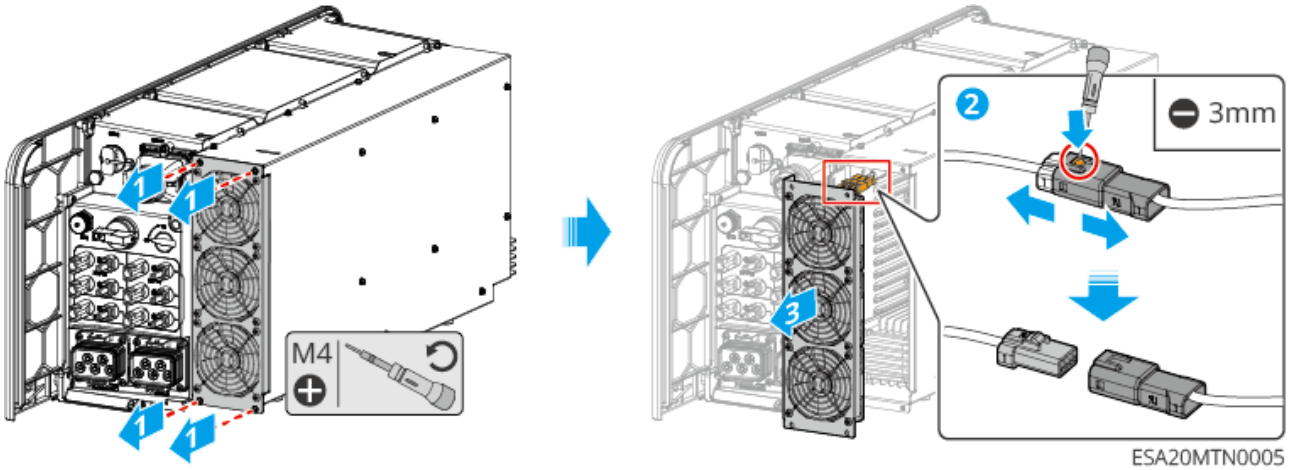

After cleaning, reinstall the fan module back into the machine.

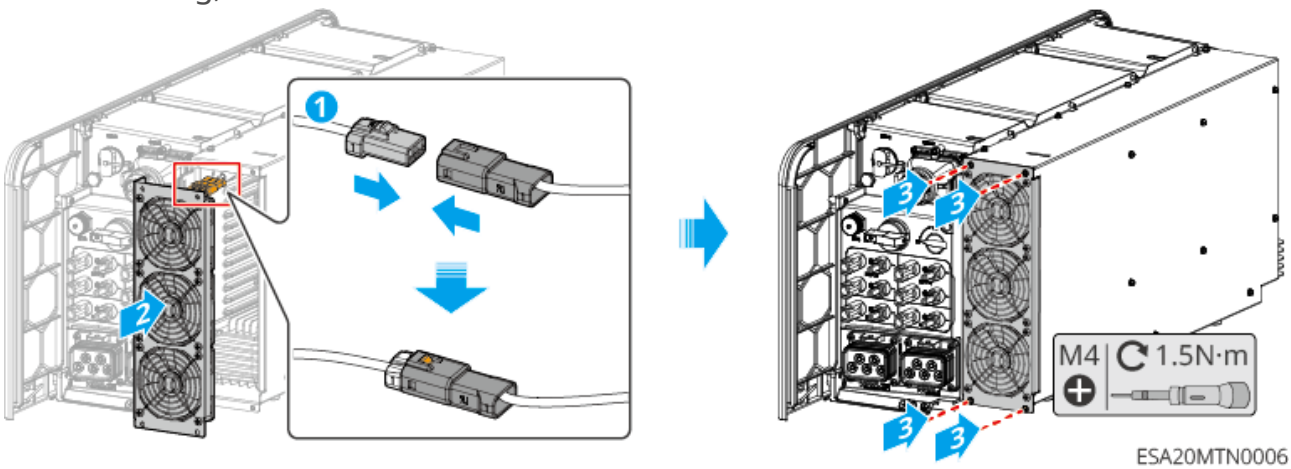

8.5 fault

NOTICE
The manual's fault content is updated irregularly, and there may be slight variations between different models. Please refer to the real-time display on your device for specific information.

8.5.1 View fault/alarm details

All fault and alarm details of the energy storage system are displayed in **SEMS+ App, SEMS+ WEB**. If your product has an abnormality and you do not see relevant fault information in **SEMS+ App, SEMS+ WEB**, please contact the after-sales service center.

- SEMS+ App

1. Open SEMS+ App and log in with any account.
2. On the home page, click "Alarm" to view the alarm information of all power stations under the account.

- SEMS+ WEB

1. Open SEMS+ WEB and log in using any account.
2. On the power station detail interface, click "Alarm" to view all alarm information of the current power station.

8.5.2 Fault Information and Troubleshooting

Please perform troubleshooting according to the following methods. If the troubleshooting methods cannot help you, please contact the after-sales service center.
When contacting the after-sales service center, please collect the following information to facilitate a quick resolution.

1. Product information, such as: serial number, software version, device installation time, fault occurrence time, fault frequency, etc.
2. Device installation environment, such as: weather conditions, whether components are blocked, have shadows, etc. It is recommended to provide photos, videos, and other files to assist in problem analysis.
3. Grid conditions.

If the system experiences a problem not listed, or if following the instructions still cannot prevent the problem or abnormality, immediately stop system operation and contact your dealer immediately.

No.	fault	Resolution
1	Unable to search for the Smart Communication Stick's wireless signal	1. Ensure no other devices are connected to the Smart Communication Stick's wireless signal. 2. Ensure the Smart Communication Stick is powered normally, with the blue signal light flashing or steady on. 3. Ensure the smart device is within the communication range of the Smart Communication Stick. 4. Refresh the App device list again. 5. Restart the inverter.
2	Unable to connect to the Smart Communication Stick's wireless signal	1. Ensure no other devices are connected to the Smart Communication Stick's wireless signal. 2. Restart the inverter or the communication stick, then try connecting to the Smart Communication Stick's wireless signal again. 3. Ensure Bluetooth pairing and encryption were successful.
3	Unable to find the router's SSID	1. Place the router closer to the Smart Communication Stick, or add a WiFi repeater to enhance the WiFi signal. 2. Reduce the number of devices connected to the router.
4	After all configuration is complete, the Smart Communication Stick fails to connect to the router	1. Restart the inverter. 2. Check if the network name, encryption method, and password in the WiFi configuration match those of the router. 3. Restart the router. 4. Place the router closer to the Smart Communication Stick, or add a WiFi repeater to enhance the WiFi signal.

No.	fault	Resolution
5	After all configuration is complete, the Smart Communication Stick fails to connect to the server	Restart the router and the inverter.

8.5.2.1 Inverter Fault

8.5.2.1.1 Troubleshooting (Fault Codes F01-F40)

```html

| Fault Code | Fault Name | Fault Cause | Troubleshooting Suggestions |
|---|---|---|---|
| F01 | Grid Power Outage | 1. Grid power outage.<br>2. The AC line or AC switch is disconnected. | 1. The alarm will automatically disappear after grid power is restored.<br>2. Check whether the AC line or AC switch is disconnected. |
```

Fault Code	Fault Name	Fault Cause	Troubleshooting Suggestions
F02	Grid Overvoltage Protection	Grid voltage is higher than the allowable range, or the high-voltage duration exceeds the high-voltage ride-through setting.	1. If it occurs occasionally, it may be a momentary grid abnormality. The inverter will resume normal operation after detecting that the grid is normal, and no manual intervention is required. 2. If it occurs frequently, check whether the grid voltage is within the allowable range. If not, contact the local power operator. If so, modify the grid overvoltage protection point with the consent of the local power operator. 3. If it cannot be restored for a long time, check whether the AC-side circuit breaker and output cable are connected properly.

Fault Code	Fault Name	Fault Cause	Troubleshooting Suggestions
F03	Grid Undervoltage Protection	Grid voltage is lower than the allowable range, or the low-voltage duration exceeds the low-voltage ride-through setting.	1. If it occurs occasionally, it may be a momentary grid abnormality. The inverter will resume normal operation after detecting that the grid is normal, and no manual intervention is required. 2. If it occurs frequently, check whether the grid voltage is within the allowable range. If not, contact the local power operator. If so, modify the grid undervoltage protection point with the consent of the local power operator. 3. If it cannot be restored for a long time, check whether the AC-side circuit breaker and output cable are connected properly.

Fault Code	Fault Name	Fault Cause	Troubleshooting Suggestions
F04	Grid Rapid Overvoltage Protection	Grid voltage detection is abnormal or an ultra-high voltage triggers the fault.	1. If it occurs occasionally, it may be a momentary grid abnormality. The inverter will resume normal operation after detecting that the grid is normal, and no manual intervention is required. 2. If it occurs frequently, check whether the grid voltage is within the allowable range. If not, contact the local power operator. If so, modify the grid undervoltage protection point with the consent of the local power operator. 3. If it cannot be restored for a long time, check whether the AC-side circuit breaker and output cable are connected properly.
F05	10min Overvoltage Protection	Within 10min, the sliding average grid voltage exceeds the range specified by safety regulations.	Check whether the grid voltage has been operating at a relatively high voltage for a long time. If it occurs frequently, check whether the grid frequency is within the allowable range. If not, contact the local power operator. If so, modify the grid 10min overvoltage protection point with the consent of the local power operator.

Fault Code	Fault Name	Fault Cause	Troubleshooting Suggestions
F06	Grid Overfrequency	Grid abnormality: The actual grid frequency is higher than required by the local grid standard.	1. If it occurs occasionally, it may be a momentary grid abnormality. The inverter will resume normal operation after detecting that the grid is normal, and no manual intervention is required. 2. If it occurs frequently, check whether the grid frequency is within the allowable range. If not, contact the local power operator. If so, modify the grid overfrequency protection point with the consent of the local power operator.
F07	Grid Underfrequency	Grid abnormality: The actual grid frequency is lower than required by the local grid standard.	1. If it occurs occasionally, it may be a momentary grid abnormality. The inverter will resume normal operation after detecting that the grid is normal, and no manual intervention is required. 2. If it occurs frequently, check whether the grid frequency is within the allowable range. If not, contact the local power operator. If so, modify the grid underfrequency protection point with the consent of the local power operator.

Fault Code	Fault Name	Fault Cause	Troubleshooting Suggestions
F08	Grid Frequency Instability	Grid abnormality: The actual grid frequency change rate does not comply with local grid standards.	1. If it occurs occasionally, it may be a momentary grid abnormality. The inverter will resume normal operation after detecting that the grid is normal, and no manual intervention is required. 2. If it occurs frequently, check whether the grid frequency is within the allowable range. If not, contact the local power operator.
F09	Anti-islanding Protection	The grid has been disconnected, but grid voltage is maintained due to the presence of loads. According to safety regulation requirements, grid connection is stopped.	1. If it occurs occasionally, it may be a momentary grid abnormality. The inverter will resume normal operation after detecting that the grid is normal, and no manual intervention is required. 2. If it occurs frequently, check whether the grid frequency is within the allowable range. If not, contact the local power operator.
F10	LVRT Undervoltage	Grid abnormality: The duration of abnormal grid voltage exceeds the time specified for high/low voltage ride-through.	1. If it occurs occasionally, it may be a momentary grid abnormality. The inverter will resume normal operation after detecting that the grid is normal, and no manual intervention is required. 2. If it occurs frequently, check whether the grid voltage and frequency are within the allowable range and stable. If not, contact the local power operator.

Fault Code	Fault Name	Fault Cause	Troubleshooting Suggestions
F11	HVRT Overvoltage	Grid abnormality: The duration of abnormal grid voltage exceeds the time specified for high/low voltage ride-through.	1. If it occurs occasionally, it may be a momentary grid abnormality. The inverter will resume normal operation after detecting that the grid is normal, and no manual intervention is required. 2. If it occurs frequently, check whether the grid voltage and frequency are within the allowable range and stable. If not, contact the local power operator.
F12	30mAGfci Protection	During inverter operation, the input-to-ground insulation resistance becomes low.	1. If it occurs occasionally, it may be caused by an occasional abnormality in the external wiring. After the fault is cleared, normal operation will resume without manual intervention. 2. If it occurs frequently or cannot be restored for a long time, check whether the PV string-to-ground insulation resistance is too low.
F13	60mAGfci Protection	During inverter operation, the input-to-ground insulation resistance becomes low.	1. If it occurs occasionally, it may be caused by an occasional abnormality in the external wiring. After the fault is cleared, normal operation will resume without manual intervention. 2. If it occurs frequently or cannot be restored for a long time, check whether the PV string-to-ground insulation resistance is too low.

Fault Code	Fault Name	Fault Cause	Troubleshooting Suggestions
F14	150mAGfci Protection	During inverter operation, the input-to-ground insulation resistance becomes low.	1. If it occurs occasionally, it may be caused by an occasional abnormality in the external wiring. After the fault is cleared, normal operation will resume without manual intervention. 2. If it occurs frequently or cannot be restored for a long time, check whether the PV string-to-ground insulation resistance is too low.
F15	Gfci Slow-change Protection	During inverter operation, the input-to-ground insulation resistance becomes low.	1. If it occurs occasionally, it may be caused by an occasional abnormality in the external wiring. After the fault is cleared, normal operation will resume without manual intervention. 2. If it occurs frequently or cannot be restored for a long time, check whether the PV string-to-ground insulation resistance is too low.
F16	DCI Level 1 Protection	The DC component of the inverter output current is higher than the allowable range specified by safety regulations or the machine default.	1. If the abnormality is caused by an external fault, the inverter will automatically resume normal operation after the fault disappears, without manual intervention. 2. If this alarm occurs frequently and affects normal power generation of the power station, please contact the dealer or after-sales service center.

Fault Code	Fault Name	Fault Cause	Troubleshooting Suggestions
F17	DCI Level 2 Protection	The DC component of the inverter output current is higher than the allowable range specified by safety regulations or the machine default.	1. If the abnormality is caused by an external fault, the inverter will automatically resume normal operation after the fault disappears, without manual intervention. 2. If this alarm occurs frequently and affects normal power generation of the power station, please contact the dealer or after-sales service center.

Fault Code	Fault Name	Fault Cause	Troubleshooting Suggestions
F18	Low Insulation Resistance	1. PV string short-circuited to protective earth. 2. The PV string installation environment is humid for a long time and the circuit has poor insulation to ground. 3. The insulation resistance of battery port wiring to ground is low.	1. Check the impedance of the PV string/battery port to protective earth. If a short circuit occurs, locate and rectify the short-circuit point. 2. Check whether the inverter protective earth wire is correctly connected. 3. If it is confirmed that the impedance is indeed lower than the default value in rainy/overcast environments, reset the inverter "Insulation Resistance Protection Point" through the App. For Australia and New Zealand market inverters, when an insulation resistance fault occurs, the following alarm methods can also be used: 1. The inverter is equipped with a buzzer. When a fault occurs, the buzzer sounds continuously for 1 minute; if the fault is not resolved, the buzzer sounds again every 30 minutes. 2. If the inverter is added to the monitoring platform, after setting the alarm notification method, the alarm information can be sent to the customer by email.

Fault Code	Fault Name	Fault Cause	Troubleshooting Suggestions
F19	Grounding Abnormal	1. The inverter protective earth wire is not connected. 2. When the PV string output is grounded, the inverter output side is not connected to an isolation transformer.	1. Please confirm whether the inverter protective earth wire is connected properly. 2. If the PV string output is grounded, confirm whether the inverter output side is connected to an isolation transformer.
F20	Hard Anti-Reverse-Power Protection	Abnormal load fluctuation.	1. If the abnormality is caused by an external fault, the inverter will automatically resume normal operation after the fault disappears, without manual intervention. 2. If this alarm occurs frequently and affects normal power generation of the power station, please contact the dealer or after-sales service center.

Fault Code	Fault Name	Fault Cause	Troubleshooting Suggestions
F21	Internal Comm Loss	Sub DSP1 communication timeout - Main DSP, Sub DSP2 communication timeout - Main DSP, Sub DSP2 communication timeout - Sub DSP1, Main DSP communication timeout - Sub DSP1, Main DSP communication timeout - Sub DSP2, or Sub DSP1 communication timeout - Sub DSP2: 1. Chip is not powered on. 2. Chip program version error.	Disconnect the AC output-side switch and the DC input-side switch. After 5 minutes, close the AC output-side switch and the DC input-side switch. If the fault persists, contact the dealer or after-sales service center.

Fault Code	Fault Name	Fault Cause	Troubleshooting Suggestions
		Main DSPcan module error, Sub DSP1can module error, or Sub DSP2can module error: 1. Frame format error 2. Parity check error 3. can bus offline 4. Hardware CRC check error 5. During transmission (reception), the control bit is set to reception (transmission). 6. Transmission to a disallowed unit.	
F22	Generator Waveform Detection Fault		

8.5.2.1.2 Fault Handling (Fault Codes F41-F80)

fault code	Fault Name	fault cause	Fault Handling Recommendations
F41	Generator Port Overload	1. Off-grid side output exceeds specification requirements 2. Off-Grid Side Short Circuit 3. Off-grid Terminal Voltage Too Low 4. When used as a heavy load port, the heavy load exceeds the specifications.	Confirm the off-grid side output voltage, current, power and other data to identify the cause of the problem.
F42, F164,F165	AFCI Failure(PV String1-n) n: Based on the inverter's actual number of strings.	1. DC side connection terminal loose; 2. Loose DC side connection terminal; 3. DC Cable Core Damaged or Loose Connection	1. After the machine reconnects to the grid, check whether the voltage and current of each circuit are abnormal, reduced, or become zero; 2. Check whether the DC side terminals are firmly connected.
F43	Grid Waveform Abnormal	Grid abnormality: Abnormal grid voltage detection triggers a fault.	1. If it occurs occasionally, it may be a short-term grid abnormality. The inverter will resume normal operation after detecting that the grid is normal, and no manual intervention is required. 2. If it occurs frequently, check whether the grid voltage and frequency are within the allowed range and stable. If not, contact the local power operator.

fault code	Fault Name	fault cause	Fault Handling Recommendations
F44	Grid Phase Loss	Grid abnormality: Grid voltage has a single-phase sag.	1. If it occurs occasionally, it may be due to a temporary grid abnormality. The inverter will resume normal operation after detecting that the grid is normal, and no manual intervention is required. 〖1|2. If this occurs frequently, check whether the grid voltage and frequency are within the permissible range and stable. If not, contact the local power operator.
F45	Grid Voltage Imbalance	Excessive phase voltage imbalance in the power grid.	1. If it appears occasionally, it may be a short-term grid abnormality. The inverter will resume normal operation after detecting that the grid is normal, and no manual intervention is required. 2. If it occurs frequently, please check whether the grid voltage and frequency are within the allowed range and stable. If not, please contact your local power operator.
F46	Grid Phase Sequence Failure	Inverter and grid wiring anomaly: non-positive sequence wiring.	1. Check whether the wiring of the inverter and the grid is in positive sequence. After the wiring is normal (e.g., swap any two live wires), the fault will automatically disappear. 2. If the wiring is correct and the fault still exists, please contact the dealer or after-sales service center.

fault code	Fault Name	fault cause	Fault Handling Recommendations
F47	Grid Rapid Shutdown Protection	Quickly shut down output after detecting the Grid Power Outage condition.	The fault automatically disappears after grid power restoration.
F48	Neutral Line Loss (Split Grid)	Split-phase Grid Neutral Wire Loss	1. After grid power supply is restored, the alarm clears automatically. 2. Check whether the AC line or AC switch is disconnected.
F49	L-PE Short Circuit	Output phase to PE low impedance or short circuit	Detect the impedance between the output phase line and PE, and identify. Repair locations with low impedance.
F50	DCVProtection Level1	Abnormal load fluctuation	1. If the abnormality is introduced by an external fault, the inverter will automatically resume normal operation after the fault disappears without manual intervention. 2. If this alarm occurs frequently and affects the normal power generation of the power station, please contact the dealer or after-sales service center.
F51	DCV Protection Level2	Abnormal load fluctuation	
F52	Multiple GFCI Failures	North American safety regulations require that after multiple faults, the system cannot automatically recover; it must be manually reset or recover after waiting 24h.	Please check if the PV string's impedance to ground is to o low.

fault code	Fault Name	fault cause	Fault Handling Recommendations
F53	AFCI (AFCI) Multiple Failures	Per North American safety standards, automatic recovery is not permitted after multiple faults – recovery must be performed manually or after a 24-hour delay.	1. After the machine reconnects to the grid, check whether various voltages and currents abnormally decrease to zero; 2. Check if the DC side terminals are securely connected.
F54	External communication disconnection	Communication with external devices of the inverter is lost, possibly due to peripheral power supply issues, mismatched Communication Protocols, or failure to configure the corresponding peripherals.	Judgment is made based on the actual model and detection enable bit. Peripherals not supported by certain models will not be detected.
F55	Back-up Output Overload	Prevent inverter from continuous over load output.	Turn off some off-grid loads to reduce the inverter's off-grid output power.
F56	Back-up Output Overvoltage	Prevent load damage caused by inverter output over voltage.	1. If it occurs occasionally, it may be caused by load switching and does not require manual intervention. 2. If it occurs frequently, please contact the dealer or after-sales service center.
F57	External Box Failure	Switch On-Grid to Off-Grid, waiting for Box relay switching time too long	1. Check if Box is working normally; 2. Check Box communication wiring is correct;

fault code	Fault Name	fault cause	Fault Handling Recommendations
F58	CTLoss	CT connection cable disconnected (Japan Safety Regulation Requirements)	Check if the CT wiring is correct;
F59	Parallel CAN Comm Abnormal	The parallel communication cable is not securely connected, or a machine is not online.	Check whether all machines are powered on and whether the parallel communication cables are securely connected.
F60	Parallel Back-up Line Reversed	The backup lines of some machines are reversed with others.	Reconnect the backup wire.
F61	Inverter Soft Start Failure	During off-grid cold start, Inverter Soft Start Failure	Check if the inverter module of the machine is damaged.
F62	AC HCT Failure	HCT Sensor Abnormal	Disconnect the AC output side switch and the DC input side switch, close the AC output side switch and the DC input side switch after 5 minutes. If the fault persists, contact the dealer or after-sales service center.
F63	GFCI HCT Failure	Leakage current sensor anomaly detected.	Disconnect the AC output side switch and the DC input side switch. 5 minutes later, close the AC output side switch and the DC input side switch. If the fault persists, please contact the dealer or after-sales service center.
F64	Inverter Internal Failure	Inverter fault exists.	Disconnect the AC output side switch and the DC input side switch. After 5 minutes, close the AC output side switch and the DC input side switch. If the fault persists, contact the dealer or after-sales service center.

fault code	Fault Name	fault cause	Fault Handling Recommendations
F65	AC Terminal Overtemperature	AC Terminal Over temperature, possible causes: 1. Inverter installation location is not ventilated. 2. Ambient Overtemperature. 3. Internal Fan Abnormal.	1. Check whether the ventilation at the inverter installation location is good and whether the ambient temperature exceeds the maximum allowable ambient temperature range. 2. If there is poor ventilation or the ambient temperature is too high, improve its ventilation and heat dissipation. 3. If ventilation and ambient temperature are normal, please contact the dealer or after-sales service center.
F66	INV Module Overtemperature	Inverter module over temperature, possible causes: 1. Inverter installation location is not ventilated. 2. Ambient Overtemperature. 3. Internal Fan Abnormal.	1. Check whether the ventilation at the inverter installation location is good and whether the ambient temperature exceeds the maximum allowable ambient temperature range. 2. If it is not ventilated or the ambient temperature is too high, improve its ventilation and heat dissipation. 3. If the ventilation and ambient temperature are normal, please contact the dealer or after-sales service center.

fault code	Fault Name	fault cause	Fault Handling Recommendations
F67	Boost Module Overtemperature	Boost Module Overtemperature, possible causes: 1. Inverter installation location is not ventilated. 2. Ambient Overtemperature. 3. Internal fan operates abnormally.	1. Check whether the ventilation at the inverter installation site is good and whether the ambient temperature exceeds the maximum allowed ambient temperature range. 2. If ventilation is poor or the ambient temperature is too high, improve its ventilation and heat dissipation. 3. If ventilation and ambient temperature are normal, contact the dealer or after-sales service center.
F68	AC Capacitor Overtemperature	Output filter capacitor temperature is to o high. Possible causes: 1. Inverter installation location is not ventilated. 2. Ambient Overtemperature. 3. Internal Fan Abnormal.	1. Check whether the ventilation at the inverter installation location is good and whether the ambient temperature exceeds the maximum allowed ambient temperature range. 2. If there is no ventilation or the ambient temperature is too high, please improve its ventilation and heat dissipation. 3. If ventilation and ambient temperature are normal, please contact the dealer or after-sales service center.
F69	PV IGBT Short Circuit	Possible causes: 1. IGBTShort Circuit 2. Inverter Sampling Circuit Abnormal	Disconnect the AC output side switch and DC input side switch, then close the AC output side switch and DC input side switch after 5 minutes. If the fault persists, contact the dealer or after-sales service center.

fault code	Fault Name	fault cause	Fault Handling Recommendations
F70	PV IGBT Open Circuit	1. Software issue causes no PWM generation. 2. Drive Circuit Abnormal: 3. IGBT Open Circuit	
F71	NTCAbnormal	NTC temperature sensor abnormal	Disconnect the AC output side switch and DC input side switch. 5 minutes later, close the AC output side switch and DC input side switch. If the fault persists, contact the distributor or after-sales service center.
F72	PWM Abnormal	PWM abnormal waveform appears	Disconnect the AC output side switch and the DC input side switch, then close the AC output side switch and the DC input side switch after 5 minutes. If the fault persists, contact the dealer or after-sales service center.
F73	CPUInterrupt Abnormal	CPU Interrupt Abnormal	Disconnect the AC output side switch and the DC input side switch. After 5 minutes, close the AC output side switch and the DC input side switch. If the fault persists, contact the dealer or after-sales service center.
F74	microelectronic fault	Function Safety detected an anomaly	Turn off the AC output switch and DC input switch. 5 minutes later, close the AC output switch and DC input switch. If the fault persists, contact the dealer or after-sales service center.

fault code	Fault Name	fault cause	Fault Handling Recommendations
F75	PV HCT Failure	boostCurrent Sensor Abnormal	Turn off the AC output side switch and the DC input side switch. After 5 minutes, turn on the AC output side switch and the DC input side switch. If the fault persists, contact the dealer or after-sales service center.
F76	1.5V Ref Abnormal	Reference circuit fault	Disconnect the AC output side switch and the DC input side switch. 5 minutes later, close the AC output side switch and the DC input side switch. If the fault persists, please contact the dealer or after-sales service center.
F77	0.3V Ref Abnormal	Reference circuit fault	
F78	CPLD Version Error	CPLD Version Error	Disconnect the AC output side switch and the DC input side switch. 5 minutes later, close the AC output side switch and the DC input side switch. If the fault persists, please contact the dealer or after-sales service center.
F79	CPLD Comm Failure	CPLD and DSP communication content error or timeout	Disconnect the AC output side switch and DC input side switch, and then close the AC output side switch and DC input side switch after 5 minutes. If the fault persists, please contact the dealer or after-sales service center.
F80	Model identificatio n fault	Fault Regarding Model Recognition Error	Disconnect the AC output side switch and the DC input side switch. After 5 minutes, close the AC output side switch and the DC input side switch. If the fault persists, contact the dealer or after-sales service center.

8.5.2.1.3 Fault Handling (Fault Codes F81-F121)

fault code	Fault Name	fault cause	Fault Handling Recommendations
F81	P-Bus Overvoltage	Bus Overvoltage, possible cause: 1. PVOvervoltage; 2. InverterBUSVoltage Sampling Abnormal; 3. The isolation effect of the dual-split transformer at the rear end of the inverter is poor, causing the two inverters to interfere with each other when connected to the grid, and one of them reports DC overvoltage during grid connection.	Turn off the AC output switch and DC input switch, 5 minutes later turn on the AC output switch and DC input switch. If the fault persists, contact the dealer or after-sales service center.
F82	N-Bus Overvoltage		
F83	Bus Overvoltage (Slave CPU1)		Disconnect the AC output switch and DC input switch, then close them 5 minutes later. If the fault still exists, contact the dealer or after-sales service center.
F84	P-Bus Overvoltage (Slave CPU1)		

fault code	Fault Name	fault cause	Fault Handling Recommendations
F85	N-Bus Overvoltage (Slave CPU1)	BUS Overvoltage, possible causes: 1. PV Overvoltage 2. InverterBUS Voltage Sampling Abnormal; 3. The isolation effect of the double-split transformer at the back end of the inverter is poor, causing mutual interference when two inverters are connected to the grid, and one of them reports DC overvoltage when connected to the grid;	
F86	Bus Overvoltage (Slave CPU2)		Disconnect the AC output side switch and DC input side switch. 5 minutes later, close the AC output side switch and DC input side switch. If the fault persists, contact the dealer or after-sales service center.
F87	P-Bus Overvoltage (Slave CPU2)		

fault code	Fault Name	fault cause	Fault Handling Recommendations
F88	N-Bus Overvoltage (Slave CPU2)	BUS Overvoltage, Possible cause: 1. PV voltage too high; 2. Inverter BUS voltage sampling anomaly; 3. The isolation effect of the dual-split transformer at the inverter rear end is poor, causing two inverters to interfere with each other when connected to the grid, and one of the inverters reports DC overvoltage when connecting to the grid;	
F89	P-Bus Overvoltage(CPLD)		Disconnect the AC output side switch and DC input side switch. 5 minutes later, close the AC output side switch and DC input side switch. If the fault persists, contact the dealer or after-sales service center.

fault code	Fault Name	fault cause	Fault Handling Recommendations
F90	N-Bus Overvoltage(CPLD)	BUSOvervoltage, Possible cause: 1. PV Overvoltage 2. InverterBUSVoltage Sample Abnormal; 3. The isolation effect of the dual-split transformer at the inverter output is poor, causing interference between the two inverters when connected to the grid, and one of them reports DC overvoltage when connecting to the grid.	
F91	FlyCap Software Overvoltage	Flying capacitor over voltage, possible causes: 1. PV Overvoltage; 2. Inverter FlyCap Voltage Sampling Abnormal;	Disconnect the AC output side switch and DC input side switch. After 5 minutes, close the AC output side switch and DC input side switch. If the fault persists, please contact the dealer or after-sales service center.
F92	FlyCap Hardware Overvoltage		
F93	FlyCap Undervoltage	FlyCap Under voltage, possible causes: 1. PVInsufficient energy; 2. FlyCap Voltage Sample Abnormal;	Disconnect the AC output side switch and DC input side switch. After 5 minutes, close the AC output side switch and DC input side switch. If the fault persists, please contact the dealer or after-sales service center.

fault code	Fault Name	fault cause	Fault Handling Recommendations
F94	FlyCap Precharge Failure	FlyCap Precharge Failure, possible causes: 1. PV Power Insufficient; 2. Inverter FlyCap Voltage Sampling Abnormal;	Disconnect the AC output switch and DC input switch. After 5 minutes, reconnect the AC output switch and DC input switch. If the fault persists, please contact the dealer or after-sales service center.
F95	FlyCap Precharge Abnormal	1. Control Loop Parameters Unreasonable 2. Hardware Damage	Disconnect the AC output side switch and DC input side switch. Close the AC output side switch and DC input side switch after 5 minutes. If the fault persists, please contact the dealer or after-sales service center.
F96, F97	PV String Overcurrent(String1-n) n: Determined based on the actual number of PV strings of the inverter.	Possible causes: 1. PV String Overcurrent; 2. PV String Current Sensor Abnormal	Turn off the AC output side switch and DC input side switch. After 5 minutes, close the AC output side switch and DC input side switch. If the fault persists, please contact the dealer or after-sales service center.
F99, F100	PV String Loss(String1-n) n: Determined based on the actual number of inverter strings	String fuse disconnected (if any)	Check if the fuse is blown.

fault code	Fault Name	fault cause	Fault Handling Recommendations
F101	Battery 1 Precharge Failure	Battery 1 Pre-charge Circuit Failure (pre-charge resistor burned out, etc.)	Check whether the pre-charge circuit is functioning properly. After only the battery is powered on, verify whether the Battery Voltage and the bus voltage are consistent. If not, contact the dealer or after-sales service center.
F102	Battery 1 Relay Failure	Battery 1 Relay Cannot Operate Normally	After the battery is powered on, check whether the battery relay operates and whether a closing sound is heard. If it does not operate, contact the distributor or after-sales service center.
F103	Battery1 Overvoltage	Battery 1 input voltage exceeds the machine's rated range	Confirm whether the Battery Voltage is with in the machine's rated range.
F104	Battery 2 Precharge Failure	Battery2 Precharge Circuit Failure (Precharge Resistor Burnt Out, etc.)	Check whether the pre-charge circuit is functioning properly. After only the battery is powered on, verify whether the Battery Voltage and the bus voltage are consistent. If not, contact the dealer or after-sales service center.
F105	Battery2Relay Failure	Battery 2 relay cannot operate normally	After the battery is powered on, check whether the battery relay operates and whether a closing sound is heard. If it does not operate, contact the distributor or after-sales service center.
F106	BAT2 Overvoltage	Battery 2 Input Voltage Exceeds Unit Rated Range	Confirm whether the Battery Voltage is with in the machine's rated range.

fault code	Fault Name	fault cause	Fault Handling Recommendations
F107	On-grid PWM Sync Failure	Abnormality in carrier synchronization grid connection.	1. Check if the sync cable connection is normal 2. Check if the master-slave setting is normal; 3. Disconnect the AC output side switch and DC input side switch. 5 minutes later, close the AC output side switch and DC input side switch. If the fault persists, please contact the dealer or after-sales service center.
F108	DSP Communication Failure	-	-
F109	External STS Failure	Inverter and STS connection cable abnormal	Check whether the wiring harness connection sequence between the inverter and STS corresponds one by one.
F110	Export Limit Protection	1. Inverter fault disconnection 2. MeterCommunication Unstable 3. Reverse power flow condition occurs	1. Check if the inverter has any other error messages. If so, perform targeted handling; 2. Check whether the meter connection is reliable; 3. If this alarm occurs frequently and affects the normal power generation of the power station, please contact the dealer or after-sales service center.
F111	Bypass Over Load	-	-
F112	Black Start Failure	-	-
F113	Offgrid AC Ins Volt High	-	-

fault code	Fault Name	fault cause	Fault Handling Recommendations
F114	Relay Failure2	Relay abnormal, reason: 1. Relay Abnormal (Relay Short Circuit) 2. Relay sampling circuit abnormal. 3. AC side wiring abnormality (possible loose connection or short circuit)	Disconnect the AC output side switch and DC input side switch, and after 5 minutes, close the AC output side switch and DC input side switch. If the fault persists, contact the dealer or after-sales service center.
F115	SVGPrecharge Disabled	SVG Precharge Hardware Failure	Contact the dealer or after-sales service center.
F116	SVG Mode PID Prevention Failure	PIDHardware Abnormal Prevention	
F117	DSP Version Error	DSP Firmware Version Identification Error	Disconnect the AC output side switch and DC input side switch. 5 minutes later, reconnect the AC output side switch and DC input side switch. If the fault persists, please contact the dealer or after-sales service center.
F118	MOSContinuous Overvoltage	1. Software issue causes inverter drive to turn off before flyback drive: 2. Inverter driver circuit abnormality causes failure to turn on: 3. PVOvervoltage; 4. MosVoltage Sampling Abnormal;	Disconnect the AC output side switch and DC input side switch. Close the AC output side switch and DC input side switch after 5 minutes. If the fault persists, contact the dealer or after-sales service center.

fault code	Fault Name	fault cause	Fault Handling Recommendations
F119	busbar short circuit fault	hardware damage	If a BUS short circuit fault occurs and the inverter remains off-grid, please contact the dealer or after-sales service center.
F120	Bus sampling anomaly	1. Bus Voltage Sampling Hardware Failure	Disconnect the AC output switch and DC input switch. After 5 minutes, close the AC output switch and DC input switch. If the fault persists, contact the dealer or after-sales service center.
F121	DC Sample Abnormal	1. BUSVoltage Sampling Hardware Failure 2. Battery Voltage Sampling Hardware Failure 3. Dcrly Relay Failure	Disconnect the AC output side switch and DC input side switch. After 5 minutes, close the AC output side switch and DC input side switch. If the fault persists, please contact the dealer or after-sales service center.

8.5.2.1.4 Fault Handling (Fault Codes F122-F171)

fault code	Fault Name	fault cause	Fault Handling Recommendations
F122	PVInput Mode Error	PV Access Mode has three modes, taking four MPPT as an example: 1. Parallel Mode: i.e. AAAA Mode (Same Source Mode), PV1-PV4 same source, 4 strings PV connect to the same PV panel 2. Partial Parallel Mode: i.e., AACC mode, PV1 and PV2 are connected from the same source, PV3 and PV4 are connected from the same source. 3. Independent Mode: i.e., ABCD Mode (Non-identical), PV1, PV2, PV3, PV4 independently connected, 4 strings of PV each connected to a PV panel If the actual connection mode of PV does not match the connection mode set by the	Check whether the PV Input Mode is correctly set (ABCD, AACC, AAAA), and re-set the PV Input Mode in the correct way. 1. Confirm that each connected PV is correctly connected; 2. If the PV is correctly connected, check via APP or the screen whether the currently set "PV Access Mode" corresponds to the actual access mode; 3. If the currently set “PV Connection Mode” does not match the actual access mode, it needs to be set to the mode consistent with the actual situation via APP or the screen. After the setting is completed, disconnect PV and AC from the power supply and restart; 4. After the setting is completed, if the current "PV Input Mode" is consistent with the actual input mode, but the fault is still reported, please contact the dealer or after-sales service center.

fault code	Fault Name	fault cause	Fault Handling Recommendations
		device for PV, this fault will be reported.	
F123	Multi-string PV Phase Error	PVInput Mode Error	Check if the PV input mode is correctly set (ABCD, AACC, AAAA), and re-set the PV input mode in the correct way. 1. Check whether the actual connected PV strings are correctly connected; 2. If PV is correctly connected, check through the APP or screen whether the currently set "PV Connection Mode" corresponds to the actual connection mode. 3. If the currently set “PV Access Mode” does not match the actual access mode, it is necessary to set the “PV Access Mode” to a mode consistent with the actual situation through APP or the screen. After the setting is complete, disconnect the power supply of PV and AC and restart; 4. After configuration, if the current "PV Connection Mode" matches the actual connection mode, but the fault is still reported, please contact the dealer or after-sales service center.
F124	Battery1 Reverse Connection Failure	Battery 1 Positive and Negative Terminals Reversed	Check whether the positive and negative terminals of the battery and the machine are consistent.

fault code	Fault Name	fault cause	Fault Handling Recommendations
F125	Battery 2 Reverse Connection Failure	Battery 2 Positive and Negative Terminals Reversed	Check whether the positive and negative terminals of the battery and the machine are consistent.
F126	Battery abnormal connection	Battery abnormal connection	Check whether the battery is operating normally.
F127	BAT Overtemperature	Battery temperature to o high, possible causes: 1. Inverter installation location not ventilated. 2. Ambient Overtemperature. 3. Internal Fan Abnormal.	Disconnect the AC output side switch and DC input side switch, 5 minutes later, close the AC output side switch and DC input side switch. If the fault persists, contact the dealer or after-sales service center.
F128	Ref Voltage Abnormal	Reference circuit fault	Disconnect the AC output side switch and DC input side switch, then close the AC output side switch and DC input side switch after 5 minutes. If the fault persists, please contact the dealer or after-sales service center.
F129	Cabinet Under Temperature	Cabinet Under Temperature, possible cause: low ambient temperature.	Turn off the AC output switch and the DC input switch. After 5 minutes, turn on the AC output switch and the DC input switch. If the fault persists, contact the dealer or after-sales service center.
F130	AC SPD Failure	AC SPD Failure	Replace the lightning protection devices on the AC side.
F131	DC Side SPD Failure	DC Side SPD Failure	Replace the DC side surge protective device.

fault code	Fault Name	fault cause	Fault Handling Recommendations
F132	Internal Fan Abnormal	Internal Fan Abnormal, possible causes: 1. Fan Power Supply Abnormal 2. Mechanical Fault(Stall); 3. Fan aging damage.	Open the AC output side switch and DC input side switch. After 5 minutes, close the AC output side switch and DC input side switch. If the fault persists, contact the dealer or after-sales service center.
F133	External Fan Abnormal	External Fan Abnormal, possible causes: 1. Fan Power Supply Abnormal; 2. Mechanical Fault(Stall); 3. Fan aging damage.	
F134	PID Abnormal	PIDHardware Failure or PVOvervoltage PIDPaused	PV Overvoltage caused by PID pause warning can be ignored. PID hardware fault can be cleared by turning off the PID switch and then turning it on to clear the PID fault, and replace the PID device.

fault code	Fault Name	fault cause	Fault Handling Recommendations
F135	Trip-Switch Trip Warning	Possible causes: Overcurrent or PV reverse connection causes the trip switch to trip;	Contact the dealer or after-sales service center; the reason for the trip is PV short circuit or reverse connection. Check if there is any historical PV short circuit warning or historical PV reverse connection warning. If yes, a maintenance technician needs to check the corresponding PV situation. After inspection and no faults found, you can manually close the trip switch and clear the historical faults through the APP interface to clear this warning.
F136	HistoryPV IGBT Short Circuit Warning	Possible causes: Over current occurred, causing the trip switch to trip.	Contact the dealer or after-sales service center; the maintenance personnel should check whether the PV short circuit warning sub-code history indicates a fault in the Boost hardware or external string; after inspection, if no fault is found, the warning can be cleared through the APP interface by clearing the historical fault operation.
F137, F138	Historical PV Reverse Connection Warning (String 1-n) （n: judge based on the actual number of inverter strings）	Possible causes: Occurred PV reverse connection causes the trip switch to trip;	Contact the dealer or after-sales service center; Maintenance personnel should check whether the corresponding string is reverse-connected according to the historical PV reverse connection warning subcode, check whether there is a voltage difference in the PV panel configuration; After the inspection is completed and no fault is found, the warning can be cleared through the APP interface by clearing the historical fault operation.

fault code	Fault Name	fault cause	Fault Handling Recommendations
F139	FlashR/W Error	Possible causes: 1. FlashContent changed; 2. Flash Lifespan exhausted;	1. Upgrade to the latest program version; 2. Contact the dealer or after-sales service center.
F140	Meter Comm Loss	This warning may only be reported after enabling the Power Limit function. Possible reasons: 1. Meter Not Connected; 2. Meter and inverter communication cable wiring error.	Check the meter wiring and connect the meter correctly. If the fault persists after inspection, please contact the dealer or after-sales service center.
F141	PVType Identificatio n Failure	PVPanel Identification Hardware Abnormal	Contact the dealer or after-sales service center.
F142	PV String Mismatch	PV PV String Mismatch, under the same MPPT, two strings have different open-circuit voltage configurations.	Check the open-circuit voltage of two PV strings, and configure strings with the same open-circuit voltage under the same MPPT. Long-term string mismatch poses a safety hazard.
F143	CT Not Connected	CT Not Connected	Check CT wiring.
F144	CTReversed	CT Reversed	Check CT wiring.
F145	PE Loss	Ground wire not connected	Check the ground wire.

fault code	Fault Name	fault cause	Fault Handling Recommendations
F146	PV String Terminal Overtemperature(String 1~8)	37176 Register PV Terminal Temperature Alarm Subcode 1 Has Been Set	-
F147	PV String Terminal Overtemperature(String 9~16)	37177 Register PV Terminal Temperature Alarm Subcode 2 Is Set	-
F148	PV String Terminal Overtemperature(String 17~20)	37178RegisterPV Terminal Temperature Alarm Subcode3 Has Been Set	-
F149	历史PV Reverse Connection Warning (String 33~48)	Possible causes: PV reverse connection causes trip switch tripped;	Contact the dealer or after-sales service center; the maintenance personnel should check the corresponding PV string for reverse polarity based on the historical PV Reverse Polarity Warning sub-code, and check if there is a voltage difference in the PV panel configuration; after inspection, if no fault is found, the warning can be cleared through the App interface by performing the clear historical fault operation.
F150	BAT1 Voltage Low	Battery Voltage below set value	-
F151	Battery 2 Voltage Low	Battery Voltage below set value	-
F152	Low Voltage of Battery Power	Battery non-charging mode, voltage below shutdown voltage	-

fault code	Fault Name	fault cause	Fault Handling Recommendations
F153	Battery 1 Voltage High	-	-
F154	Battery 2 Voltage High	-	-
F155	Online Low Insulation Resistance	1. PV string short circuit to protective earth. 2. The environment for PV string installation is relatively humid for a long time and the wiring has poor insulation to ground.	1. Check the impedance of the PV string to protective earth. If a short circuit occurs, rectify the short circuit point. 2. Check whether the protective ground wire of the inverter is correctly connected. 3. If it is confirmed that the impedance is indeed lower than the default value in rainy weather, please reset the "Insulation Resistance Protection Point".
F156	Micro-grid Overload Warning	backup Port Input Current Too High	Occasional occurrence requires no action; if the alarm occurs frequently, please contact the dealer or after-sales service center.
F157	Manual Reset	-	-
F158	Generator Phase Sequence Abnormal	-	-
F159	Multiplexed Port Configuratio n Abnormal	Multiplexed (Diesel Generator) port configured as Microgrid or large load, but actually connected to a Diesel Generator	Use APP to change the multiplexed (Diesel Generator) port configuration.

fault code	Fault Name	fault cause	Fault Handling Recommendations
F160	EMS Forced Off-grid	EMS issues forced off-grid, but the off-grid function is not enabled	Enable off-grid function.
F161	Passive Anti-islanding Protection	-	-
F162	Grid Type Fault	The actual grid type (two-phase or split-phase) does not match the safety regulation settings.	Switch to the corresponding safety regulations according to the actual Type of Electrical Supply System.
F163	Grid Phase Instability	Grid anomaly: Grid voltage phase change rate does not comply with local grid standards.	1. If it occurs occasionally, it may be due to a short-term grid abnormality. The inverter will resume normal operation after detecting that the grid is normal, and no manual intervention is required. 2. If this occurs frequently, please check whether the grid frequency is within the allowable range. If not, please contact the local power operator.
F166	PV Terminal Overtemperature	PV Terminal Overtemperature, possible causes: 1. Inverter installation location without ventilation. 2. Ambient Overtemperature. 3. Internal Fan Abnormal.	

fault code	Fault Name	fault cause	Fault Handling Recommendations
F167	AC Terminal Overtemperature Warning	AC Terminal Overtemperature, possible causes: 1. The inverter installation location is not ventilated. 2. Ambient overtemperature. 3. Internal fan abnormal.〖7|〗	1. Check whether the ventilation at the inverter installation location is adequate and whether the ambient temperature exceeds the maximum allowable ambient temperature range. 2. If ventilation is inadequate or the ambient temperature is too high, improve ventilation and heat dissipation. 3. If both ventilation and ambient temperature are normal, contact the dealer or after-sales service center.
F168	Battery terminal over-temperature	BAT Terminal Overtemperature, possible causes: 1. The inverter installation location is not ventilated. 2. Ambient Overtemperature.	
F169	Battery terminal high temperature alarm	BAT Terminal Overtemperature, possible causes: 1. Poor ventilation at inverter installation location. 2. Ambient temperature too high.	
F170	STS over-temperature	STS Overtemperature, possible causes: 1. The STS installation location is not well ventilated. 2. Ambient Overtemperature.	

fault code	Fault Name	fault cause	Fault Handling Recommendations
F171	Abnormal inverter-to-battery wiring	Abnormal connection of the power cable between the battery and inverter.	Check whether the power line connection between the battery and the inverter is normal.

8.5.2.1.5 Fault Symptom Handling

Fault Name	Fault Cause	Fault Handling Suggestions
Generator Failure	1. When the generator is not connected, this fault will be displayed continuously. 2. When the generator is running, if the generator safety regulations are not met, this fault will be triggered.	1. If the generator is not connected, ignore this fault; 2. It is normal for this fault to appear when the generator has a fault. After the generator recovers, wait for a period and the fault will be cleared automatically; 3. This fault will not affect the normal operation of off-grid mode. 4. If both the generator and the grid are connected and meet safety requirements, the grid will take priority for grid connection, and the system will operate in grid-connected state.
BMS Status Bit Error	BMS module fault	Switch off the AC output side switch and DC input side switch. After 5 minutes, close the AC output side switch and DC input side switch. If the fault still exists, contact the dealer or after-sales service center.
Ambient Overtemperature	1. Poor machine ventilation 2. Hot airflow flows back to the ambient temperature sampling point	Switch off the AC output side switch and DC input side switch. After 5 minutes, close the AC output side switch and DC input side switch. If the fault still exists, contact the dealer or after-sales service center.

Fault Name	Fault Cause	Fault Handling Suggestions
PV Terminal Overtemperature	PV Terminal Overtemperature. Possible causes: 1. The installation location of the inverter is poorly ventilated. 2. The ambient temperature is too high. 3. The internal fan is working abnormally.	1. Check whether the installation location of the inverter is well ventilated and whether the ambient temperature exceeds the maximum allowable range. 2. If ventilation is poor or the ambient temperature is too high, improve the ventilation and heat dissipation. 3. If ventilation and ambient temperature are both normal, contact the dealer or after-sales service center.
BAT Terminal Overtemperature	BAT Terminal Overtemperature. Possible causes: 1. The installation location of the inverter is poorly ventilated. 2. The ambient temperature is too high.	1. Check whether the installation location of the inverter is well ventilated and whether the ambient temperature exceeds the maximum allowable range. 2. If ventilation is poor or the ambient temperature is too high, improve the ventilation and heat dissipation. 3. If ventilation and ambient temperature are both normal, contact the dealer or after-sales service center.

Fault Name	Fault Cause	Fault Handling Suggestions
AC Terminal Overtemperature Warning	AC Terminal Overtemperature. Possible causes: 1. The installation location of the inverter is poorly ventilated. 2. The ambient temperature is too high. 3. The internal fan is working abnormally.	
BAT Terminal Overtemperature Warning	BAT Terminal Overtemperature. Possible causes: 1. The installation location of the inverter is poorly ventilated. 2. The ambient temperature is too high.	1. Check whether the installation location of the inverter is well ventilated and whether the ambient temperature exceeds the maximum allowable range. 2. If ventilation is poor or the ambient temperature is too high, improve the ventilation and heat dissipation. 3. If ventilation and ambient temperature are both normal, contact the dealer or after-sales service center.
Three-phase on-grid fault	Three-phase external wiring error	Rewire.
External STS Failure	The cable connection between the inverter and STS is abnormal.	Check whether the wiring harness connection sequence between the inverter and STS corresponds one-to-one in order.

Fault Name	Fault Cause	Troubleshooting Suggestions
Parallel Comm Timeout Shutdown	In parallel mode, if a slave does not communicate with the master for more than 400 seconds	Check whether the parallel communication harness is reliably connected, and check whether the slave address is duplicated.
Three-phase off-grid phase loss fault	Three-phase system phase loss	1. Check whether all inverters are powered on; 2. Check whether each phase of the three-phase system has an inverter connected;
EPO	External hardware EPO button triggered or remote EPO command triggered	1. If remote shutdown was actively triggered, it can be ignored; 2. If not actively triggered, contact the dealer or after-sales service center.
High Combustible Gas Concentration	Automatically triggered when the combustible gas detection device detects a concentration of 20% LEL or above	1. After the fault occurs, the machine will automatically open the air damper to vent and reduce the concentration. The fault will be automatically cleared when the concentration drops below 5% LEL for 15 minutes. 2. After the fault occurs, if a cluster-level fire protection fault is triggered, the air damper will be closed automatically, and the air damper status will be confirmed within 30s to ensure that cluster-level fire protection is executed in an enclosed space. 3. Contact the dealer or after-sales service center.

Fault Name	Fault Cause	Troubleshooting Suggestions
Combustible Gas Device Air Damper Opening Inconsistent with Feedback Signal	The control signal for opening the air damper is inconsistent with the feedback signal	1. Check that the harness signal connection is correct. 2. Contact the dealer or after-sales service center.
One-Key Shutdown	Check whether the one-key shutdown function has been enabled in the App	Disable one-key shutdown.
Offline Shutdown	-	-
Remote Shutdown	-	-
On-Grid SPD Fault	-	1. Try restarting the machine and observe whether the fault is cleared; 2. If the fault cannot be cleared after a restart, contact the dealer or after-sales service center.
Off-Grid SPD Fault	-	1. Try restarting the machine and observe whether the fault is cleared; 2. If the fault cannot be cleared after a restart, contact the dealer or after-sales service center.

Fault Name	Fault Cause	Troubleshooting Suggestions
Child Node Communication Failure	Internal Comm Abnormal	1. Try restarting the machine and observe whether the fault is cleared; 2. If the fault cannot be cleared after a restart, contact the dealer or after-sales service center.
Dehumidifier Communication Failure	The communication link between the dehumidifier and the LC control box is abnormal	1. Check the link communication harness and observe whether the fault is cleared; 2. Try restarting the machine and observe whether the fault is cleared; 3. If the fault cannot be cleared after a restart, contact the dealer or after-sales service center.
Combustible Gas Detection Device Communication Failure	1. The combustible gas device was not properly configured with 485 address 2 at the factory. 2. The communication link between the combustible gas device and the LC control box is abnormal	1. Check the link communication harness and observe whether the fault is cleared; 2. Try restarting the machine and observe whether the fault is cleared; 3. Use the method provided by the combustible gas manufacturer to check whether the address of the combustible gas device is 2; if not, modify it; 4. If the fault cannot be cleared after a restart, contact the dealer or after-sales service center.

Fault Name	Fault Cause	Troubleshooting Suggestions
DG Communication Failure	The communication link between the control board and the DG is abnormal	1. Check the link communication harness and observe whether the fault is cleared; 2. Try restarting the machine and observe whether the fault is cleared; 3. If the fault cannot be cleared after a restart, contact the dealer or after-sales service center.
Battery Over Voltage	1. Single cell voltage is too high 2. Voltage sampling wire abnormal	Record the fault symptom, restart the battery, wait a few minutes, and confirm whether the fault disappears. If the problem still exists after restart, contact the after-sales service center.
	1. Total battery voltage is too high 2. Voltage sampling wire abnormal	
Battery Undervoltage	1. Single cell voltage is too low 2. Voltage sampling wire abnormal	
	1. Total battery voltage is too low 2. Voltage sampling wire abnormal	
Battery Overcurrent	1. Charging current is too high, battery current limiting is abnormal: sudden changes in temperature and voltage values 2. Inverter response abnormal	

Fault Name	Fault Cause	Troubleshooting Suggestions
	Battery discharge current is too high	
Battery Overtemperature	1. Ambient Overtemperature 2. Temperature sensor abnormal	
Battery Undertemperature	1. Ambient temperature too low 2. Temperature sensor abnormal	
Battery Terminal Overtemperature	Terminal temperature too high	

Fault Name	Fault Cause	Troubleshooting Suggestions
Battery Imbalance	1. If the temperature difference is too large at different stages, the battery will limit battery power, i.e., limit the charge/discharge current. Therefore, this problem generally rarely occurs. 2. Cell capacity degradation leads to excessive internal resistance, causing high temperature rise during overcurrent and thus a large temperature difference. 3. Poor cell tab welding causes the cell to heat up too quickly during overcurrent. 4. Temperature sampling issue; 5. Power wire connection loose	

Fault Name	Fault Cause	Troubleshooting Suggestions
	1. Inconsistent cell aging degrees 2. Slave board chip issues can also lead to excessive cell voltage differences; 3. Slave board balancing issues can also lead to excessive cell voltage differences 4. Caused by harness issues	
Insulation Resistance	Insulation resistance damaged	Check whether the ground wire is properly connected, restart the battery. If the problem still exists after restart, contact the after-sales service center.
Pre-charging Failure	Pre-charging Failure	This indicates that during the pre-charging process, the voltage across the pre-charging MOS always exceeds the specified threshold. After shutdown and restart, observe whether the fault persists. Check whether the wiring is correct and whether the pre-charging MOS is damaged.
Sampling Wire Fault	Battery sampling wire loose or disconnected	Check the wiring, restart the battery. If the problem still exists after restart, contact the after-sales service center.
	Single cell voltage sampling wire loose or disconnected	

Fault Name	Fault Cause	Troubleshooting Suggestions
	Single cell temperature sampling wire loose or disconnected	Check the wiring, restart the battery. If the problem still exists after restart, contact the after-sales service center.
	Dual-channel current comparison error too large, or current sampling wire loop abnormal	
	Dual-channel voltage comparison error too large or MCU and AFE voltage comparison error too large, or voltage sampling wire loop abnormal	
	Temperature sampling wire loop abnormal, loose, or disconnected	
	Overvoltage level 5 or overtemperature level 5, three-terminal fuse blown	Three-terminal fuse blown. Contact the after-sales service center to replace the main control board.
Relay or MOS Overtemperature	Relay or MOS Overtemperature	This fault indicates that the MOS transistor temperature exceeds the specified threshold. Shut down and let it stand for 2 hours to allow the temperature to recover.
Shunt Overtemperature	Shunt Overtemperature	This fault indicates that the shunt temperature exceeds the specified threshold. Shut down and let it stand for 2 hours to allow the temperature to recover.

Fault Name	Fault Cause	Troubleshooting Suggestions
BMS1 Other Fault 1 (Residential Storage)	Relay or MOS open circuit	1. Upgrade the software, shut down and let it stand for 5 minutes, then restart and check whether the fault persists; 2. If it persists, replace the battery pack
	Relay or MOS short circuit	1. Upgrade the software, shut down and let it stand for 5 minutes, then restart and check whether the fault persists; 2. If it persists, replace the battery pack
	Communication abnormality between the master cluster and slave cluster, or inconsistent cells between clusters	1. Check the slave's battery information and software version, and whether the communication wire connection with the master is normal 2. Upgrade the software
	Battery system loop harness abnormality, resulting in the interlock signal not forming a loop	Check whether the terminal resistor is installed correctly
	BMS and PCS communication abnormality	1. Confirm whether the communication wire interface definition between the inverter and the connected battery is correct; 2. Contact the after-sales service center to check the background data and observe whether the inverter and battery software match correctly.

Fault Name	Fault Cause	Troubleshooting Suggestions
	BMS master control and slave control communication harness abnormality	1. Check the wiring and restart the battery; 2. Upgrade the battery. If the problem still exists after restart, contact the after-sales service center.
	Communication lost between main and negative chip	
	Circuit breaker or shunt trip abnormality	1. Shut down and let it stand for 5 minutes, then restart and check whether the fault persists; 2. Observe the blind-mate connectors at the bottom of the PACK and PCU, and check whether the communication pins are loose or bent;
	MCU self-test failure	Upgrade the software and restart the battery. If the problem still exists after restart, contact the after-sales service center.
	1. Software version too low or BMS board damaged 2. Large number of paralleled inverters, excessive impact on the battery during pre-charging	1. Upgrade the software and observe whether the fault persists 2. If it is a parallel configuration, black-start the battery first, then start the inverter
	MCU internal fault	Upgrade the software and restart the battery. Generally, this detects MCU or external component damage. If the problem still exists after restart, contact the after-sales service center.

Fault Name	Fault Cause	Troubleshooting Suggestions
	Master control current exceeds the specified threshold	1. Shut down and let it stand for 5 minutes, then restart and check whether the fault persists; 2. Check whether the inverter power is set too high, causing the bus load to be exceeded;
	Inconsistent cells in parallel cluster batteries	Confirm whether the cells of the parallel cluster batteries are consistent
	Positive and negative terminals of parallel cluster batteries reversed	Check whether the positive and negative terminals of the parallel cluster batteries are reversed
	Severe overtemperature, overvoltage, etc. triggering the fire protection system	Contact the after-sales service center.
Air Conditioner Failure	Air conditioner abnormal failure	Try restarting the system. If the fault is not cleared, contact the after-sales service center.
	Cabinet door not closed	Check whether the cabinet door is properly closed
	Supply voltage too high	Confirm whether the supply voltage meets the air conditioner input voltage requirements. After confirming it meets the requirements, power on again.
	Insufficient supply voltage	
	No voltage input	

Fault Name	Fault Cause	Troubleshooting Suggestions
	Unstable supply voltage	
	Compressor voltage unstable	Try restarting the system. If the fault is not cleared, contact the after-sales service center.
	Sensor loose or damaged	
	Air conditioner fan abnormal	
BMS1 Other Fault 2 (Residential Storage)	Abnormal voltage or current inside the DCDC	Refer to the specific DC fault details.
	DCDC overload or radiator temperature too high, etc.	
	Cell sampling abnormality or inconsistent aging degrees	Contact the after-sales service center.
	Fan operation not executed properly	Contact the after-sales service center.
	Output port screws loose or poor contact	1. Shut down the battery and check the wiring and output port screws 2. After confirmation, restart the battery and observe whether the fault persists. If it persists, contact the after-sales service center.
	Battery used for too long or cells severely damaged	Contact the after-sales service center to replace the pack.

Fault Name	Fault Cause	Troubleshooting Suggestions
	1. Software version too low or BMS board damaged 2. Large number of paralleled inverters, excessive impact on the battery during pre-charging	1. Upgrade the software and observe whether the fault persists. 2. If it is a parallel configuration, black-start the battery first, then start the inverter.
	Heating film damaged	Contact the after-sales service center.
	Heating film three-terminal fuse blown, heating function unavailable	Contact the after-sales service center.
	Software model, cell type, and hardware model do not match	Check whether the software model, SN number, cell type, and hardware model are consistent. If inconsistent, contact the after-sales service center.
	Thermal management board communication disconnected	1. Shut down and let it stand for 5 minutes, then restart and check whether the fault persists; 2. If the fault is not cleared, contact after-sales to replace the pack.
	Pack fan fault signal triggered	
DCDC Fault	Output port voltage too high	Check the output port voltage. If the output port voltage is normal and the fault cannot be cleared by itself after restarting the battery, contact the after-sales service center.

Fault Name	Fault Cause	Troubleshooting Suggestions
	DCDC module detects battery voltage exceeding the maximum charging voltage	Stop charging, discharge to below 90% SOC or let it stand for 2 hours. If ineffective and the fault persists after restart, contact the after-sales service center.
	Radiator temperature too high	Let the battery stand for 1 hour to allow the radiator temperature to drop. If ineffective and the fault persists after restart, contact the after-sales service center.
	Battery discharge current too high	Check whether the load exceeds the battery's discharge capability. Turn off the load or stop the PCS for 60s. If ineffective and the fault persists after restart, contact the after-sales service center.
	Output port power harness positive and negative terminals reversed with parallel cluster battery or PCS	Turn off the battery manual switch, check whether the output port wiring is correct, and restart the battery.
	Output power relay cannot close	Check whether the output port wiring is correct and whether there is a short circuit. If ineffective and the fault persists after restart, contact the after-sales service center.
	Power device temperature too high	Let the battery stand for 1 hour to allow the temperature of the internal power devices to drop. If ineffective and the fault persists after restart, contact the after-sales service center.
	Relay sticking	If the fault persists after restart, contact the after-sales service center.

Fault Name	Fault Cause	Troubleshooting Suggestions
Battery Rack Circulating Current Failure	1. Cell imbalance 2. No full charge calibration at first power-on	Record the fault symptom, restart the battery, wait a few minutes, and confirm whether the fault disappears. If the problem still exists after restart, contact the after-sales service center.
BMS1 Other Fault 3 (Utility Storage)	Communication abnormality with Linux module	1. Check whether the communication connection is normal 2. Upgrade the software and restart the battery to observe whether the fault persists. If it persists, contact the after-sales service center.
	Cell temperature rise too fast	Cell abnormality. Contact after-sales to replace the pack.
	SOC below 10%	Charge the battery.
	SN write does not comply with the rules	Check whether the SN digits are normal. If abnormal, contact the after-sales service center.
	1. Daisy-chain communication abnormality within the battery cluster 2. Inconsistent cell aging degrees between battery clusters	1. Check the pack contact condition of a single battery cluster 2. Confirm the usage of each cluster battery, such as cumulative charge/discharge capacity, cycle count, etc. 3. Contact the after-sales service center.
	Humidity inside the pack too high	-
	Fuse blown	Contact after-sales to replace the pack.
	Low battery level	Charge the battery.
	Circuit breaker abnormality	Contact after-sales to replace the pack.

Fault Name	Fault Cause	Troubleshooting Suggestions
BMS1 Other Fault 4 (Utility Storage)	External device abnormality	Contact after-sales to replace the pack.
Contactor Failure 1	-	-
Contactor Failure 2	-	-
Overload Protection (Ksic)	Continuous overload (exceeding 690kVA) for 10s	Contact the after-sales service center.
Overload Protection (Smart Port	Continuous overload (exceeding 690kVA) for 10s	Contact the after-sales service center.
Overcurrent Protection (Ksic)	-	-
Overcurrent Protection (Smart Port)	-	-
Master AC On Meter Comm Error	1. Possibly the meter is not connected to the master 2. Possibly the meter communication wire is loose	1. Check whether the meter is connected to the master 2. Check whether the meter communication wire is loose
Parallel Slave Meter Error	Meter connected to the slave	Set the machine connected to the meter as the master

Fault Name	Fault Cause	Troubleshooting Suggestions
Slave AC On Timeout with Master	1. Slave address setting error 2. Slave communication wire loose	1. Check whether the slave address is duplicated 2. Check whether the parallel communication wire is loose

8.5.2.2 battery fault

Serial Number	Fault Name	fault cause	Fault Handling Recommendations
1	BMS1 Rack1 Total Voltage Too High Warning	1. Battery system over voltage 2. Voltage measurement line abnormal	1. Discharge the battery to check if the fault persists; 2. If the fault is not resolved, contact the after-sales service center.

Serial Number	Fault Name	fault cause	Fault Handling Recommendations
2	BMS1 Rack1 Total Voltage Low Warning	1. Battery system under voltage 2. Voltage measurement line abnormal	1. Charge the battery and let it rest to see if the fault persists. When the inverter has charging conditions, restart the battery to trigger a quick charge. 2. Determine the working status of the inverter, whether it is not charging the battery due to working mode or other issues, try to charge the battery through the inverter, and observe if the fault is resolved. 3. If the fault is not resolved, contact after-sales service center.
3	BMS1 Rack1 Cell Overvoltage Warning	1. Single cell over voltage 2. Voltage measurement line abnormal	1. Discharge the battery and let it stand to see if the fault persists; 2. If the fault is not resolved, contact the after-sales service center.

Serial Number	Fault Name	fault cause	Fault Handling Recommendations
4	BMS1 Rack1 Cell Voltage Too Low Warning /BMS1 RACK1 Cell voltage is too low warning	1. Single cell voltage to o low 2. Voltage measurement line abnormal	1. Charge the battery and let it rest to see if the fault persists; 2. Verify the inverter's operation and determine if it is not charging the battery due to working mode or other issues. Attempt to charge the battery via the inverter and observe if the fault clears. 3. If the fault persists, contact after-sales service.
5	BMS1 Rack1 Charging Overtemperature Warning	1. Ambient Overtemperature 2. Temperature sensor abnormal	1. Stop charging and discharging, let it rest and check if the fault persists; 2. If the fault persists, contact the after-sales service center.

Serial Number	Fault Name	fault cause	Fault Handling Recommendations
6	BMS1 Rack1 Discharging Temperature Too High Warning	1. Ambient Overtemperature 2. Temperature sensor abnormal	1. Stop charging/discharging, let it rest, and check if the fault persists. 2. If the fault is not resolved, contact after-sales service.
7	BMS1 Rack1 Charging temperature is too low warning	1. Low ambient temperature 2. Temperature sensor abnormal	1. Check the cell temperature in the background. If the minimum temperature is higher than -20°C, set the battery to discharge to increase the cell temperature. 2. If the temperature is lower than -20°C, turn off the battery and place it in a warm environment, and use it after the cell temperature rises. 3. If none of the above works, contact the after-sales service center.

Serial Number	Fault Name	fault cause	Fault Handling Recommendations
8	BMS1 Rack1 Discharging Temperature Too Low Warning/	1. Low ambient temperature 2. Temperature sensor abnormal	1. Check the cell temperature in the background. If the minimum temperature is higher than -20°C, set the battery to discharge to raise the cell temperature. 2. If the temperature is lower than -20°C, shut down the battery and place it in a warm environment. Use it after the cell temperature recovers. 3. If none of the above works, contact the after-sales service center.

Serial Number	Fault Name	fault cause	Fault Handling Recommendations
9	BMS1 Rack1 Charge Overcurrent Warning/	1. Charging Current to o high, battery current limiting abnormal: temperature and voltage values sudden change 2. Inverter abnormal response	1. Stop charging and let it rest to see if the fault persists; 2. Check if the inverter is configured with excessive power, causing it to exceed the battery's rated operating current; 3. If overcurrent persists, contact the after-sales service center.
10	BMS1 Rack1 Discharge overcurrent warning/ BMS1 RACK1 Discharge overcurrent warning	1. Excessive discharge current, abnormal current limiting of battery: sudden change in temperature and voltage values. 2. Inverter abnormal response	1. Stop discharging, let it rest and check if the fault persists; 2. Check if the inverter's power setting is too high, causing it to exceed the battery's rated operating current; 3. If overcurrent persists, contact after-sales service center.

Serial Number	Fault Name	fault cause	Fault Handling Recommendations
11	BMS1 Rack1 Insulation Resistance Low Warning/	Insulation resistance damage or abnormal contact	Check whether the ground wire is properly connected, restart the battery. If the problem persists after restart, please contact the after-sales service center.
12	BMS1 Rack1 Cell excessive temperature differentials warning/	1. In different stages of excessive temperature difference, the battery will limit its power, i. e., limit the charge/discharge current. The refore, this issue is generally unlikely to occur. 2. Cell capacity degradation leads to excessive internal resistance, resulting in a large temperature rise during over current, and thus the temperature difference	Power off, restart the battery, and wait for 2 hours. If the problem is not resolved, contact the after-sales service center.

Serial Number	Fault Name	fault cause	Fault Handling Recommendations
		becomes large. 3. Poor welding of cell tabs leads to rapid heating of the cell under Over current. 4. Temperature sampling issue; 5. Loose power line connection	
13	BMS1 Rack1 Post Overtemperature Warning/	Terminal post over temperature	1. Stop charging and discharging, and let it stand to see if the fault persists; 2. If the fault is not resolved, contact after-sales service center.

Serial Number	Fault Name	fault cause	Fault Handling Recommendations
14	BMS1 Rack1 Cell excessive voltage differential warning/	1. Cell aging inconsistency 2. Slave board chip issues can also lead to excessive cell voltage difference. 3. Slave board balancing issues can also cause excessive cell voltage difference. 4. caused by wiring harness issues	1. Stop charging and discharging, and let it sit to see if the fault persists; 2. If the fault is not resolved, contact after-sales service center.
15	BMS1 Rack1 PCS communication loss warning/	Abnormal communication between BMS and PCS	Check whether the communication cable connection between the battery and the inverter is intact.
16	BMS1 Rack1 DCDC warning/ BMS1 RACK1 DCDC warning	Abnormal voltage or current inside the DC-DC converter.	Upgrade the software, restart the battery. If the problem persists after restarting, please contact the after-sales service center.
17	BMS1 Rack1 Heat film MOS adhesion warning/	Heating film MOSFET damaged	Please contact the after-sales service center.
18	BMS1 Rack1 Heat film MOS open warning/	Heating circuit abnormal	Please contact the after-sales service center.

Serial Number	Fault Name	fault cause	Fault Handling Recommendations
19	BMS1 Rack1 Total Voltage Too High Fault/	1. Battery system over voltage 2. Voltage measurement line abnormal	1. Discharge the battery to see if the fault persists; 2. If the fault is not resolved, please contact the after-sales service center.
20	BMS1 Rack1 Total Voltage Too Low Fault/	1. Battery system under voltage 2. Voltage measurement line abnormal	1. Charge the battery and let it stand to see if the fault persists; 2. Check the inverter operating status to determine if it is not charging the battery due to working mode issues, etc. Try charging the battery through the inverter and observe if the fault is resolved. 3. If the fault is not resolved, please contact the after-sales service center.
21	BMS1 Rack1 Cell Overvoltage Fault/	1. Single cell over voltage 2. Voltage measurement line abnormal	1. Discharge the battery and let it sit to check if the fault persists; 2. If the fault is not resolved, please contact the after-sales service center.

Serial Number	Fault Name	fault cause	Fault Handling Recommendations
22	BMS1 Rack1 Cell voltage is too low fault	1. Single cell voltage to o low 2. Voltage sampling line abnormal	1. Charge the battery and let it sit to see if the fault persists. 2. Determine the inverter's operating status, and check if the battery is not being charged due to issues such as the operating mode. Try charging the battery through the inverter and observe if the fault is resolved.
23	BMS1 Rack1 Charging Overtemperature Fault/	1. Ambient Overtemperature Temperature sensor abnormal	1. Place the battery in a cool place, shut it down and let it sit for 30 minutes. After restarting, check if the fault persists; 2. If the fault persists, please contact the after-sales service center.

Serial Number	Fault Name	fault cause	Fault Handling Recommendations
24	BMS1 Rack1 Discharge Overtemperature Fault/	1. Ambient Overtemperature Temperature sensor abnormal	1. Place the battery in a cool area, power it off and let it sit for 30 minutes, then restart and check if the fault persists. 2. If the fault persists, please contact the after-sales service center.
25	BMS1 Rack1 Charging Temperature Too Low Fault /	1. Low ambient temperature 2. Temperature sensor abnormal	1. Check the cell temperature via the backend. If the minimum temperature is above -20°C, set the battery to discharge to increase the cell temperature. 2. If the temperature is below -20°C, turn off the battery and place it in a warm environment. Use it after the cell temperature rises. 3. If the above measures are ineffective, contact the after-sales service center.

Serial Number	Fault Name	fault cause	Fault Handling Recommendations
26	BMS1 Rack1 Discharging temperature too low fault	1. Low ambient temperature 2. Temperature sensor abnormal	1. Check the battery cell temperature in the background. If the minimum temperature is above -20°C, set the battery to discharge to raise the cell temperature. 2. If the temperature is below -20°C, turn off the battery and place it in a warm environment. Use it after the cell temperature rises. 3. If none of the above works, contact the after-sales service center.

Serial Number	Fault Name	fault cause	Fault Handling Recommendations
27	BMS1 Rack1 Charge Overcurrent Fault/	1. Charging Current to o high, battery current limiting abnormal: temperature and voltage values sudden change 2. Inverter abnormal response	1. Shut down and leave idle for 5 minutes, then restart and check if the fault persists; 2. Check whether the inverter power setting is too high, causing the battery rated current to be exceeded; 3. If the overcurrent persists, contact the after-sales service center.
28	BMS1 Rack1 Discharge Overcurrent Fault/	1. Excessive discharge current, abnormal current limiting of battery: sudden change in temperature and voltage values. 2. Inverter abnormal response	1. Power off for 5 minutes, then restart to check if the fault persists; 2. Check if the inverter power setting is too high, causing the battery rated operating current to be exceeded; 3. If overcurrent persists, contact the after-sales service center.

Serial Number	Fault Name	fault cause	Fault Handling Recommendations
29	BMS1 Rack1 Insulation Resistance Low Fault/	Insulation resistance damage or abnormal contact	1. Check if the ground wire is properly connected, restart the battery, 2. Upgrade the software. If the problem persists, please contact the after-sales service center.
30	BMS1 RACK1 Cell excessive temperature differentials fault/ BMS1 RACK1 Cell excessive temperature differentials fault	1. In different stages of excessive temperature difference, the battery will limit its power, i. e., limit the charge/discharge current. The refore, this issue is generally unlikely to occur. 2. Cell capacity degradation leads to excessive internal resistance, resulting in a large temperature rise during over current, and thus the temperature difference	Power off, restart the battery, and wait for 2 hours. If the problem is not resolved, contact the after-sales service center.

Serial Number	Fault Name	fault cause	Fault Handling Recommendations
		becomes large. 3. Poor welding of cell tabs leads to rapid heating of the cell under Over current. 4. Temperature sampling issue; 5. Loose power line connection	
31	BMS1 RACK1 Post temperature is too high fault/	Terminal post over temperature	1. If the fault persists after 30 minutes of shutdown, restart and check; 2. If the fault persists, contact the after-sales service center.

Serial Number	Fault Name	fault cause	Fault Handling Recommendations
32	BMS1 Rack1 Cell excessive voltage differentials fault/	1. Cell aging inconsistency 2. Slave board chip issues can also lead to excessive cell voltage difference. 3. The slave board balancing issue can also cause excessive cell voltage difference. 4. caused by wiring harness issues	Power off, restart the battery, and wait for 2 hours. If the problem is not resolved, contact the after-sales service center.
33	BMS1 Rack1 Relay or MOS Short-circuit Fault/	MOS short circuit	1. Upgrade the software, let the device sit idle for 5 minutes after shutdown, then restart and check if the fault persists; 2. If it persists, contact the after-sales service center.

Serial Number	Fault Name	fault cause	Fault Handling Recommendations
34	BMS1 Rack1 Relay or MOS open circuit fault/	MOS open circuit	1. Upgrade the software, power off and let it sit for 5 minutes, restart and check if the fault persists. 2. If it persists, contact the after-sales service center.
35	BMS1 Rack1 Pre-charging Failure/	The voltage across the pre-charge MOSFET always exceeds the specified threshold.	1. Upgrade the software, power off and leave it for 5 minutes, then restart and check if the fault persists; 2. If it persists, contact the after-sales service center.
36	BMS1 Rack1 Acquisition line fault/ BMS1 RACK1 Acquisition line fault	Battery sampling line poor contact or disconnection	Shut down, check wiring, restack batteries, and if the problem persists after restart, contact the after-sales service center.

Serial Number	Fault Name	fault cause	Fault Handling Recommendations
37	BMS1 Rack1 Relay or MOS temperature is too high fault/	Relay or MOSFET over-temperature	1. Upgrade the software, power off and let it sit for 30 minutes, then restart and check if the fault persists; 2. If it persists, contact after-sales service center.
38	BMS1 Rack1 Combiner Box Overtemperature Fault/	Shunt over temperature	1. Upgrade the software, leave it powered off for 30 minutes, then restart and check if the fault persists; 2. If it persists, contact the after-sales service center.
39	BMS1 Rack1 Slave MCU communication fault/	Communication loss between master and slave chips	1. Check the wiring, restart the battery, 2. Update the battery. If the problem persists after restart, please contact the after-sales service center.

Serial Number	Fault Name	fault cause	Fault Handling Recommendations
40	BMS1 Rack1 BMU Comm Failure/	BMS master-slave communication harness fault	1. Check the wiring, restart the battery, 2. Upgrade the battery. If the problem persists after restart, please contact the after-sales service center.
41	BMS1 Rack1 Micro-electronics fault/	MCU internal fault	Upgrade the software, restart the battery. If the problem persists after restart, please contact the after-sales service center.
42	BMS1 Rack1 Hardware Overcurrent Fault/	1. Software version is to o low or BMS board is damaged. 2. When a large number of inverters operate in parallel, the battery experiences excessive surge during pre-charge.	1. Upgrade the software and observe if the fault persists. 2. In case of parallel connection, black start the battery first, then start the inverter.
43	BMS1 Rack1 Application software fault/	MCU self-test failed	Upgrade the software, restart the battery. If the problem persists after restart, please contact the after-sales service center.

Serial Number	Fault Name	fault cause	Fault Handling Recommendations
44	BMS1 Rack1 Parallel Rack fault/	Communication anomaly between main cluster and slave cluster, or cell inconsistency between clusters.	1. Check the battery information and software version of the slave, and whether the communication cable connection with the master is normal. 2. software upgrade
45	BMS1 Rack1 DCDC fault /	DCDC over load or heatsink temperature to o high, etc.	Upgrade the software, restart the battery. If the problem persists after restart, please contact the after-sales service center.
46	BMS1 Rack1 Inconsistent cell fault	1. Cell identification anomaly 2. Different types of cell stacking	Check the cell type
47	BMS1 Rack1 Output Port Over Temperature Fault/	Loose screw or poor contact at the output port.	1. Battery shutdown, check the wiring and output terminal screws 2. After confirmation, restart the battery, observe if the fault persists, if it persists, contact after-sales service center.

Serial Number	Fault Name	fault cause	Fault Handling Recommendations
48	BMS1 Rack1 SOH too low fault/	Excessive battery usage or severe cell damage	Replace pack
49	BMS1 Rack1 Heating Film Three-Terminal Fault/ BMS1 RACK1 Heating film MOS Three-terminal fault	Heating film MOSFET damaged	Please contact the after-sales service center.

9 technical parameter

9.1 Inverter Parameters

Technical Data	GW5K-ETA-G20	GW6K-ETA-G20	GW8K-ETA-G20
Battery Side			
Battery Type	LFP ($LiFePO_4$)	LFP ($LiFePO_4$)	LFP ($LiFePO_4$)
Nominal Voltage (V)	750	750	750
Voltage Range (V)	700~950	700~950	700~950
Start-up Voltage (V)	720	720	720
Number of Battery Input	1	1	1
Max. Continuous Charging Current (A)	6.7	8.1	10.7
Max. Continuous Discharging Current (A)	7.4	8.9	11.8
Max. Charging Power (kW)	5	6	8
Max. Discharging Power (kW)	5.5	6.6	8.8
PV Side			
Max. Input Power (kW)	10	12	16

Technical Data	GW5K-ETA-G20	GW6K-ETA-G20	GW8K-ETA-G20
Max. Input Voltage (V)*1	1000	1000	1000
MPPT Operating Voltage Range (V)*2	120~950	120~950	120~950
MPPT Voltage Range at Nominal Power (V)	185~850	225~850	300~850
Start-up Voltage (V)	150	150	150
Nominal Input Voltage (V)	750	750	750
Max. MPPT Current (A)	21/21/21	21/21/21	21/21/21
Max. MPPT Short Circuit Current (A)	26/26/26	26/26/26	26/26/26
Max. Backfeed Current to The Array (A)	0	0	0
Number of MPPTs	3	3	3
Number of Strings per MPPT	1/1/1	1/1/1	1/1/1
AC Side (Grid Port)			
Rated Power (kW)	5	6	8
Max. Power (kW)	5	6	8
Rated Apparent Power to Grid (kVA)	5	6	8

Technical Data	GW5K-ETA-G20	GW6K-ETA-G20	GW8K-ETA-G20
Rated Apparent Power from Grid (kVA)	5	6	8
Max. Apparent Power to Grid (kVA)*3	5	6	8
Max. Apparent Power from Grid (kVA)	43.5*4	43.5*4	43.5*4
Nominal Voltage (V)	220/380, 230/400, 3L/N/PE	220/380, 230/400, 3L/N/PE	220/380, 230/400, 3L/N/PE
Voltage Range (V)	180 ~ 260 (According to local standard)	180 ~ 260 (According to local standard)	180 ~ 260 (According to local standard)
Nominal Frequency (Hz)	50/60	50/60	50/60
Frequency Range (Hz)	45~55 / 55~65	45~55 / 55~65	45~55 / 55~65
Rated Current to Grid (A)	7.6 @380V 7.3 @400V	9.1 @380V 8.7 @400V	12.2 @380V 11.6 @400V
Rated Current from Grid (A)	7.6 @380V 7.3 @400V	9.1 @380V 8.7 @400V	12.2 @380V 11.6 @400V
Max. Current to Grid (A)*6	7.6 @380V 7.3 @400V	9.1 @380V 8.7 @400V	12.2 @380V 11.6 @400V
Max. Current from Grid (A)*6	63.0*4	63.0*4	63.0*4
Max. Output Fault Current (Peak and Duration) (A)	46.7@4μs	46.7@4μs	46.7@4μs

Technical Data	GW5K-ETA-G20	GW6K-ETA-G20	GW8K-ETA-G20
Inrush Current (Peak and Duration) (A)	21.3@5ms	21.3@5ms	21.3@5ms
THDi	<3%	<3%	<3%
Maximum Output Overcurrent Protection (A)	46.7	46.7	46.7
Type of Voltage	a.c.	a.c.	a.c.
AC Side (Back-up Port)			
Rated Apparent Power (kVA)	5	6	8
Max. Apparent Power (kVA)*7	Off-grid: 5.5 (10.0, 10s), on-grid: 43.5	Off-grid: 6.6(12, 10s), on-grid： 43.5	Off-grid: 8.8 (16.0, 10s), on-grid： 43.5
Nominal Voltage (V)	220/380, 230/400, 3L/N/PE	220/380, 230/400, 3L/N/PE	220/380, 230/400, 3L/N/PE
Nominal Frequency (Hz)	50/60	50/60	50/60
Frequency Range (Hz)	45~55 / 55~65	45~55 / 55~65	45~55 / 55~65
Rated Current (A)	7.6 @380V 7.3 @400V	9.1 @380V 8.7 @400V	12.2 @380V 11.6 @400V
Max. Current (A)*7	Off-grid: 11.4, on-grid: 63	Off-grid: 13.7, on-grid:63	Off-grid: 18.2, on-grid: 63
Max. Fault Current (Peak and Duration) (A)	46.7@4μs	46.7@4μs	46.7@4μs

Technical Data	GW5K-ETA-G20	GW6K-ETA-G20	GW8K-ETA-G20
Inrush Current (Peak and Duration) (A)	21.3@5ms	21.3@5ms	21.3@5ms
Maximum Overcurrent Protection (A)	46.7	46.7	46.7
THDv (@Linear Load)	<3%	<3%	<3%
On/Off-grid Switching Time（ms）	<4	<4	<4
Efficiency			
Max. Efficiency	98.00%	98.00%	98.00%
European Efficiency	96.40%	96.90%	97.10%
Max. Battery to AC Efficiency	98.00%	98.00%	98.00%
Protection			
PV String Current Monitoring	Integrated	Integrated	Integrated
PV Insulation Resistance Detection	Integrated	Integrated	Integrated
Residual Current Monitoring	Integrated	Integrated	Integrated
PV Reverse Polarity Protection	Integrated	Integrated	Integrated

Technical Data	GW5K-ETA-G20	GW6K-ETA-G20	GW8K-ETA-G20
Battery Reverse Polarity Protection	Integrated	Integrated	Integrated
Anti-islanding Protection	Integrated	Integrated	Integrated
AC Overcurrent Protection	Integrated	Integrated	Integrated
AC Short Circuit Protection	Integrated	Integrated	Integrated
AC Overvoltage Protection	Integrated	Integrated	Integrated
DC Switch	Integrated	Integrated	Integrated
DC Surge Protection	Type II(Type I+II optional)	Type II(Type I+II optional)	Type II(Type I+II optional)
AC Surge Protection	Type II	Type II	Type II
Rapid Shutdown	Optional	Optional	Optional
AFCI	Optional	Optional	Optional
Remote Shutdown	Integrated	Integrated	Integrated
General Data			
Power Factor	0.8 leading ... 0.8 lagging	0.8 leading ... 0.8 lagging	0.8 leading ... 0.8 lagging
Operating Temperature Range (℃)	-35~+60	-35~+60	-35~+60
Operating Environment	Indoor/Outdoor	Indoor/Outdoor	Indoor/Outdoor

Technical Data	GW5K-ETA-G20	GW6K-ETA-G20	GW8K-ETA-G20
Relative Humidity	0~100%	0~100%	0~100%
Max. Operating Altitude (m)	4000 (>2000 derating)	4000 (>2000 derating)	4000 (>2000 derating)
Cooling Method	Smart Fan Cooling	Smart Fan Cooling	Smart Fan Cooling
User Interface	LED, WLAN+APP	LED, WLAN+APP	LED, WLAN+APP
Communication with BMS	CAN	CAN	CAN
Communication	RS485, WiFi+LAN+Bluetooth, 4G+Bluetooth(Optional)	RS485, WiFi+LAN+Bluetooth, 4G+Bluetooth(Optional)	RS485, WiFi+LAN+Bluetooth, 4G+Bluetooth(Optional)
Communication Protocols	Modbus-RTU, Modbus-TCP	Modbus-RTU, Modbus-TCP	Modbus-RTU, Modbus-TCP
Weight (kg)	34	34	34
Dimension (W×H×D mm)	800*340*270	800*340*270	800*340*270
Noise Emission (dB)	≤35	≤35	≤35
Topology	Non-isolated	Non-isolated	Non-isolated
Self-consumption at Night (W)	≤10	≤10	≤10
Ingress Protection Rating	IP66	IP66	IP66
DC Connector	MC4, VACONN Terminal	MC4, VACONN Terminal	MC4, VACONN Terminal

Technical Data	GW5K-ETA-G20	GW6K-ETA-G20	GW8K-ETA-G20
AC Connector	VACONN Terminal	VACONN Terminal	VACONN Terminal
Environmental Category	4K4H	4K4H	4K4H
Pollution Degree	III	III	III
Overvoltage Category	DC II / AC III	DC II / AC III	DC II / AC III
Protective Class	I	I	I
Storage Temperature (℃)	-40~+70	-40~+70	-40~+70
The Decisive Voltage Class (DVC)	Battery: C PV: C AC: C Com: A	Battery: C PV: C AC: C Com: A	Battery: C PV: C AC: C Com: A
Mounting Method	Wall/Floor Mounted	Wall/Floor Mounted	Wall/Floor Mounted
Active Anti-islanding Method*8	SMS(Slip-mode frequency) +AFD	SMS(Slip-mode frequency) +AFD	SMS(Slip-mode frequency) +AFD
Type of Electrical Supply System	three phase	three phase	three phase
Country of Manufacture	China	China	China
Certification			
Grid Standard	Please refer to the official website		
Safety Regulation			

Technical Data	GW5K-ETA-G20	GW6K-ETA-G20	GW8K-ETA-G20
EMC			

Technical Data	GW9.999K-ETA-G20	GW10K-ETA-G20	GW12K-ETA-G20
Battery Side			
Battery Type	LFP ($LiFePO_4$)	LFP ($LiFePO_4$)	LFP ($LiFePO_4$)
Nominal Voltage (V)	750	750	750
Voltage Range (V)	700~950	700~950	700~950
Start-up Voltage (V)	720	720	720
Number of Battery Input	1	1	1
Max. Continuous Charging Current (A)	13.4	13.4	16.1
Max. Continuous Discharging Current (A)	14.7	14.7	17.7
Max. Charging Power (kW)	10	10	12
Max. Discharging Power (kW)	11	11	13.2
PV Side			
Max. Input Power (kW)	20	20	24

Technical Data	GW9.999K-ETA-G20	GW10K-ETA-G20	GW12K-ETA-G20
Max. Input Voltage (V)*1	1000	1000	1000
MPPT Operating Voltage Range (V)*2	120~950	120~950	120~950
MPPT Voltage Range at Nominal Power (V)	250~850	250~850	300~850
Start-up Voltage (V)	150	150	150
Nominal Input Voltage (V)	750	750	750
Max. MPPT Current (A)	21/21/21/21	21/21/21/21	21/21/21/21
Max. MPPT Short Circuit Current (A)	26/26/26/26	26/26/26/26	26/26/26/26
Max. Backfeed Current to The Array (A)	0	0	0
Number of MPPTs	4	4	4
Number of Strings per MPPT	1/1/1/1	1/1/1/1	1/1/1/1
AC Side (Grid Port)			
Rated Power (kW)	9.999	10	12
Max. Power (kW)	9.999	10	12
Rated Apparent Power to Grid (kVA)	9.999	10	12

Technical Data	GW9.999K-ETA-G20	GW10K-ETA-G20	GW12K-ETA-G20
Rated Apparent Power from Grid (kVA)	9.999	10	12
Max. Apparent Power to Grid (kVA)*3	9.999	10	12
Max. Apparent Power from Grid (kVA)	43.5*4	43.5*4	43.5*4
Nominal Voltage (V)	220/380, 230/400, 3L/N/PE	220/380, 230/400, 3L/N/PE	220/380, 230/400, 3L/N/PE
Voltage Range (V)	180 ~ 260 (According to local standard)	180 ~ 260 (According to local standard)	180 ~ 260 (According to local standard)
Nominal Frequency (Hz)	50/60	50/60	50/60
Frequency Range (Hz)	45~55 / 55~65	45~55 / 55~65	45~55 / 55~65
Rated Current to Grid (A)	15.2 @380V 14.5 @400V	15.2 @380V 14.5 @400V	18.2 @380V 17.4 @400V
Rated Current from Grid (A)	15.2 @380V 14.5 @400V	15.2 @380V 14.5 @400V	18.2 @380V 17.4 @400V
Max. Current to Grid (A)*6	15.2 @380V 14.5 @400V	15.2 @380V 14.5 @400V	18.2 @380V 17.4 @400V
Max. Current from Grid (A)*6	63.0*4	63.0*4	63.0*4
Max. Output Fault Current (Peak and Duration) (A)	74.6@4μs	74.6@4μs	74.6@4μs

Technical Data	GW9.999K-ETA-G20	GW10K-ETA-G20	GW12K-ETA-G20
Inrush Current (Peak and Duration) (A)	25.4@5ms	25.4@5ms	25.4@5ms
THDi	<3%	<3%	<3%
Maximum Output Overcurrent Protection (A)	74.6	74.6	74.6
Type of Voltage	a.c.	a.c.	a.c.
AC Side (Back-up Port)			
Rated Apparent Power (kVA)	10	10	12
Max. Apparent Power (kVA)*7	Off-grid: 11(20.0, 10s), on-grid： 43.5	Off-grid: 11(20.0, 10s), on-grid: 43.5	Off-grid: 13.2(24, 10s), on-grid: 43.5
Nominal Voltage (V)	220/380, 230/400, 3L/N/PE	220/380, 230/400, 3L/N/PE	220/380, 230/400, 3L/N/PE
Nominal Frequency (Hz)	50/60	50/60	50/60
Frequency Range (Hz)	45~55 / 55~65	45~55 / 55~65	45~55 / 55~65
Rated Current (A)	15.2 @380V 14.5 @400V	15.2 @380V 14.5 @400V	18.2 @380V 17.4 @400V
Max. Current (A)*7	Off-grid: 22.8, on-grid:63	Off-grid: 22.8, on-grid: 63	Off-grid: 27.3, on-grid: 63
Max. Fault Current (Peak and Duration) (A)	74.6@4μs	74.6@4μs	74.6@4μs

Technical Data	GW9.999K-ETA-G20	GW10K-ETA-G20	GW12K-ETA-G20
Inrush Current (Peak and Duration) (A)	25.4@5ms	25.4@5ms	25.4@5ms
Maximum Overcurrent Protection (A)	74.6	74.6	74.6
THDv (@Linear Load)	<3%	<3%	<3%
On/Off-grid Switching Time（ms）	<4	<4	<4
Efficiency			
Max. Efficiency	98.10%	98.10%	98.10%
European Efficiency	97.20%	97.20%	97.20%
Max. Battery to AC Efficiency	98.00%	98.00%	98.00%
Protection			
PV String Current Monitoring	Integrated	Integrated	Integrated
PV Insulation Resistance Detection	Integrated	Integrated	Integrated
Residual Current Monitoring	Integrated	Integrated	Integrated
PV Reverse Polarity Protection	Integrated	Integrated	Integrated

Technical Data	GW9.999K-ETA-G20	GW10K-ETA-G20	GW12K-ETA-G20
Battery Reverse Polarity Protection	Integrated	Integrated	Integrated
Anti-islanding Protection	Integrated	Integrated	Integrated
AC Overcurrent Protection	Integrated	Integrated	Integrated
AC Short Circuit Protection	Integrated	Integrated	Integrated
AC Overvoltage Protection	Integrated	Integrated	Integrated
DC Switch	Integrated	Integrated	Integrated
DC Surge Protection	Type II(Type I+II optional)	Type II(Type I+II optional)	Type II(Type I+II optional)
AC Surge Protection	Type II	Type II	Type II
Rapid Shutdown	Optional	Optional	Optional
AFCI	Optional	Optional	Optional
Remote Shutdown	Integrated	Integrated	Integrated
General Data			
Power Factor	0.8 leading ... 0.8 lagging	0.8 leading ... 0.8 lagging	0.8 leading ... 0.8 lagging
Operating Temperature Range (℃)	-35~+60	-35~+60	-35~+60

Technical Data	GW9.999K-ETA-G20	GW10K-ETA-G20	GW12K-ETA-G20
Operating Environment	Indoor/Outdoor	Indoor/Outdoor	Indoor/Outdoor
Relative Humidity	0~100%	0~100%	0~100%
Max. Operating Altitude (m)	4000 (>2000 derating)	4000 (>2000 derating)	4000 (>2000 derating)
Cooling Method	Smart Fan Cooling	Smart Fan Cooling	Smart Fan Cooling
User Interface	LED, WLAN+APP	LED, WLAN+APP	LED, WLAN+APP
Communication with BMS	CAN	CAN	CAN
Communication	RS485, WiFi+LAN+Bluetooth, 4G+Bluetooth(Optional)	RS485, WiFi+LAN+Bluetooth, 4G+Bluetooth(Optional)	RS485, WiFi+LAN+Bluetooth, 4G+Bluetooth(Optional)
Communication Protocols	Modbus-RTU, Modbus-TCP	Modbus-RTU, Modbus-TCP	Modbus-RTU, Modbus-TCP
Weight (kg)	34	34	34
Dimension (W×H×D mm)	800*340*270	800*340*270	800*340*270
Noise Emission (dB)	≤40	≤40	≤40
Topology	Non-isolated	Non-isolated	Non-isolated
Self-consumption at Night (W)	≤10	≤10	≤10
Ingress Protection Rating	IP66	IP66	IP66

Technical Data	GW9.999K-ETA-G20	GW10K-ETA-G20	GW12K-ETA-G20
DC Connector	MC4, VACONN Terminal	MC4, VACONN Terminal	MC4, VACONN Terminal
AC Connector	VACONN Terminal	VACONN Terminal	VACONN Terminal
Environmental Category	4K4H	4K4H	4K4H
Pollution Degree	III	III	III
Overvoltage Category	DC II / AC III	DC II / AC III	DC II / AC III
Protective Class	I	I	I
Storage Temperature (℃)	-40~+70	-40~+70	-40~+70
The Decisive Voltage Class (DVC)	Battery: C PV: C AC: C Com: A	Battery: C PV: C AC: C Com: A	Battery: C PV: C AC: C Com: A
Mounting Method	Wall/Floor Mounted	Wall/Floor Mounted	Wall/Floor Mounted
Active Anti-islanding Method*8	SMS(Slip-mode frequency) +AFD	SMS(Slip-mode frequency) +AFD	SMS(Slip-mode frequency) +AFD
Type of Electrical Supply System	three phase	three phase	three phase
Country of Manufacture	China	China	China
Certification			

Technical Data	GW9.999K-ETA-G20	GW10K-ETA-G20	GW12K-ETA-G20
Grid Standard	Please refer to the official website		
Safety Regulation			
EMC			

Technical Data	GW15K-ETA-G20	GW20K-ETA-G20	GW25K-ETA-G20
Battery Side			
Battery Type	LFP ($LiFePO_4$)	LFP ($LiFePO_4$)	LFP ($LiFePO_4$)
Nominal Voltage (V)	750	750	750
Voltage Range (V)	700~950	700~950	700~950
Start-up Voltage (V)	720	720	720
Number of Battery Input	1	1	1
Max. Continuous Charging Current (A)	20.1	26.7	33.3
Max. Continuous Discharging Current (A)	22.1	29.4	36.7
Max. Charging Power (kW)	15	20	25
Max. Discharging Power (kW)	16.5	22	27.5
PV Side			

Technical Data	GW15K-ETA-G20	GW20K-ETA-G20	GW25K-ETA-G20
Max. Input Power (kW)	30	40	50
Max. Input Voltage (V)*1	1000	1000	1000
MPPT Operating Voltage Range (V)*2	120~950	120~950	120~950
MPPT Voltage Range at Nominal Power (V)	360~850	400~850	400~850
Start-up Voltage (V)	150	150	150
Nominal Input Voltage (V)	750	750	750
Max. MPPT Current (A)	21/21/21/21	21/21/21/21	21/21/42/42
Max. MPPT Short Circuit Current (A)	26/26/26/26	26/26/26/26	26/26/52/52
Max. Backfeed Current to The Array (A)	0	0	0
Number of MPPTs	4	4	4
Number of Strings per MPPT	1/1/1/1	1/1/1/1	1/1/2/2
AC Side (Grid Port)			
Rated Power (kW)	15	20	25
Max. Power (kW)	15	20	25

Technical Data	GW15K-ETA-G20	GW20K-ETA-G20	GW25K-ETA-G20
Rated Apparent Power to Grid (kVA)	15	20	25
Rated Apparent Power from Grid (kVA)	15	20	25
Max. Apparent Power to Grid (kVA)*3	15	20	25
Max. Apparent Power from Grid (kVA)	43.5*4	43.5*4	55.2*5
Nominal Voltage (V)	220/380, 230/400, 3L/N/PE	220/380, 230/400, 3L/N/PE	220/380, 230/400, 3L/N/PE
Voltage Range (V)	180 ~ 260 (According to local standard)	180 ~ 260 (According to local standard)	180 ~ 260 (According to local standard)
Nominal Frequency (Hz)	50/60	50/60	50/60
Frequency Range (Hz)	45~55 / 55~65	45~55 / 55~65	45~55 / 55~65
Rated Current to Grid (A)	22.8 @380V 21.8 @400V	30.4 @380V 29.0 @400V	37.9 @380V 36.3 @400V
Rated Current from Grid (A)	22.8 @380V 21.8 @400V	30.4 @380V 29.0 @400V	37.9 @380V 36.3 @400V
Max. Current to Grid (A)*6	22.8 @380V 21.8 @400V	30.4 @380V 29.0 @400V	37.9 @380V 36.3 @400V
Max. Current from Grid (A)*6	63.0*4	63.0*4	80.0*5

Technical Data	GW15K-ETA-G20	GW20K-ETA-G20	GW25K-ETA-G20
Max. Output Fault Current (Peak and Duration) (A)	83.3@4μs	83.3@4μs	125@4μs
Inrush Current (Peak and Duration) (A)	29.1@5ms	29.1@5ms	32.3@5ms
THDi	<3%	<3%	<3%
Maximum Output Overcurrent Protection (A)	83.3	83.3	125
Type of Voltage	a.c.	a.c.	a.c.
AC Side (Back-up Port)			
Rated Apparent Power (kVA)	15	20	25
Max. Apparent Power (kVA)*7	Off-grid: 16.5(30, 10s), on-grid:43.5	Off-grid: 22(30.0, 10s), on-grid:43.5	Off-grid: 27.5(45.0, 10s), on-grid:55.2
Nominal Voltage (V)	220/380, 230/400, 3L/N/PE	220/380, 230/400, 3L/N/PE	220/380, 230/400, 3L/N/PE
Nominal Frequency (Hz)	50/60	50/60	50/60
Frequency Range (Hz)	45~55 / 55~65	45~55 / 55~65	45~55 / 55~65
Rated Current (A)	22.8 @380V 21.8 @400V	30.4 @380V 29.0 @400V	37.9 @380V 36.3 @400V
Max. Current (A)*7	Off-grid: 33.4, on-grid: 63	Off-grid: 33.4, on-grid: 63	Off-grid: 50.0, on-grid: 80

Technical Data	GW15K-ETA-G20	GW20K-ETA-G20	GW25K-ETA-G20
Max. Fault Current (Peak and Duration) (A)	83.3@4μs	83.3@4μs	125@4μs
Inrush Current (Peak and Duration) (A)	29.1@5ms	29.1@5ms	32.3@5ms
Maximum Overcurrent Protection (A)	83.3	83.3	125
THDv (@Linear Load)	<3%	<3%	<3%
On/Off-grid Switching Time（ms）	<4	<4	<4
Efficiency			
Max. Efficiency	98.10%	98.10%	98.20%
European Efficiency	97.30%	97.30%	97.40%
Max. Battery to AC Efficiency	98.00%	98.00%	98.00%
Protection			
PV String Current Monitoring	Integrated	Integrated	Integrated
PV Insulation Resistance Detection	Integrated	Integrated	Integrated
Residual Current Monitoring	Integrated	Integrated	Integrated

Technical Data	GW15K-ETA-G20	GW20K-ETA-G20	GW25K-ETA-G20
PV Reverse Polarity Protection	Integrated	Integrated	Integrated
Battery Reverse Polarity Protection	Integrated	Integrated	Integrated
Anti-islanding Protection	Integrated	Integrated	Integrated
AC Overcurrent Protection	Integrated	Integrated	Integrated
AC Short Circuit Protection	Integrated	Integrated	Integrated
AC Overvoltage Protection	Integrated	Integrated	Integrated
DC Switch	Integrated	Integrated	Integrated
DC Surge Protection	Type II(Type I+II optional)	Type II(Type I+II optional)	Type II(Type I+II optional)
AC Surge Protection	Type II	Type II	Type II
Rapid Shutdown	Optional	Optional	Optional
AFCI	Optional	Optional	Optional
Remote Shutdown	Integrated	Integrated	Integrated
General Data			
Power Factor	0.8 leading ... 0.8 lagging	0.8 leading ... 0.8 lagging	0.8 leading ... 0.8 lagging
Operating Temperature Range (℃)	-35~+60	-35~+60	-35~+60

Technical Data	GW15K-ETA-G20	GW20K-ETA-G20	GW25K-ETA-G20
Operating Environment	Indoor/Outdoor	Indoor/Outdoor	Indoor/Outdoor
Relative Humidity	0~100%	0~100%	0~100%
Max. Operating Altitude (m)	4000 (>2000 derating)	4000 (>2000 derating)	4000 (>2000 derating)
Cooling Method	Smart Fan Cooling	Smart Fan Cooling	Smart Fan Cooling
User Interface	LED, WLAN+APP	LED, WLAN+APP	LED, WLAN+APP
Communication with BMS	CAN	CAN	CAN
Communication	RS485, WiFi+LAN+Bluetooth, 4G+Bluetooth(Optional)	RS485, WiFi+LAN+Bluetooth, 4G+Bluetooth(Optional)	RS485, WiFi+LAN+Bluetooth, 4G+Bluetooth(Optional)
Communication Protocols	Modbus-RTU, Modbus-TCP	Modbus-RTU, Modbus-TCP	Modbus-RTU, Modbus-TCP
Weight (kg)	34	34	38
Dimension (W×H×D mm)	800*340*270	800*340*270	800*340*270
Noise Emission (dB)	≤40	≤40	≤45
Topology	Non-isolated	Non-isolated	Non-isolated
Self-consumption at Night (W)	≤10	≤10	≤10
Ingress Protection Rating	IP66	IP66	IP66

Technical Data	GW15K-ETA-G20	GW20K-ETA-G20	GW25K-ETA-G20
DC Connector	MC4, VACONN Terminal	MC4, VACONN Terminal	MC4, VACONN Terminal
AC Connector	VACONN Terminal	VACONN Terminal	VACONN Terminal
Environmental Category	4K4H	4K4H	4K4H
Pollution Degree	III	III	III
Overvoltage Category	DC II / AC III	DC II / AC III	DC II / AC III
Protective Class	I	I	I
Storage Temperature (℃)	-40~+70	-40~+70	-40~+70
The Decisive Voltage Class (DVC)	Battery: C PV: C AC: C Com: A	Battery: C PV: C AC: C Com: A	Battery: C PV: C AC: C Com: A
Mounting Method	Wall/Floor Mounted	Wall/Floor Mounted	Wall/Floor Mounted
Active Anti-islanding Method*8	SMS(Slip-mode frequency) +AFD	SMS(Slip-mode frequency) +AFD	SMS(Slip-mode frequency) +AFD
Type of Electrical Supply System	three phase	three phase	three phase
Country of Manufacture	China	China	China
Certification			
Grid Standard			

Technical Data	GW15K-ETA-G20	GW20K-ETA-G20	GW25K-ETA-G20
Safety Regulation	Please refer to the official website		
EMC			

Technical Data	GW29.999K-ETA-G20	GW30K-ETA-G20
Battery Side		
Battery Type	LFP ($LiFePO_4$)	LFP ($LiFePO_4$)
Nominal Voltage (V)	750	750
Voltage Range (V)	700~950	700~950
Start-up Voltage (V)	720	720
Number of Battery Input	1	1
Max. Continuous Charging Current (A)	40.0	40.0
Max. Continuous Discharging Current (A)	44.1	44.1
Max. Charging Power (kW)	30	30
Max. Discharging Power (kW)	33	33
PV Side		
Max. Input Power (kW)	60	60
Max. Input Voltage (V)*1	1000	1000
MPPT Operating Voltage Range (V)*2	120~950	120~950

Technical Data	GW29.999K-ETA-G20	GW30K-ETA-G20
MPPT Voltage Range at Nominal Power (V)	450~850	450~850
Start-up Voltage (V)	150	150
Nominal Input Voltage (V)	750	750
Max. MPPT Current (A)	21/21/42/42	21/21/42/42
Max. MPPT Short Circuit Current (A)	26/26/52/52	26/26/52/52
Max. Backfeed Current to The Array (A)	0	0
Number of MPPTs	4	4
Number of Strings per MPPT	1/1/2/2	1/1/2/2
AC Side (Grid Port)		
Rated Power (kW)	29.999	30
Max. Power (kW)	29.999	30
Rated Apparent Power to Grid (kVA)	29.999	30
Rated Apparent Power from Grid (kVA)	29.999	30
Max. Apparent Power to Grid (kVA)*3	29.999	30
Max. Apparent Power from Grid (kVA)	55.2*5	55.2*5
Nominal Voltage (V)	220/380, 230/400, 3L/N/PE	220/380, 230/400, 3L/N/PE

Technical Data	GW29.999K-ETA-G20	GW30K-ETA-G20
Voltage Range (V)	180 ~ 260 (According to local standard)	180 ~ 260 (According to local standard)
Nominal Frequency (Hz)	50/60	50/60
Frequency Range (Hz)	45~55 / 55~65	45~55 / 55~65
Rated Current to Grid (A)	45.5 @380V 43.5 @400V	45.5 @380V 43.5 @400V
Rated Current from Grid (A)	45.5 @380V 43.5 @400V	45.5 @380V 43.5 @400V
Max. Current to Grid (A)*6	45.5 @380V 43.5 @400V	45.5 @380V 43.5 @400V
Max. Current from Grid (A)*6	80.0*5	80.0*5
Max. Output Fault Current (Peak and Duration) (A)	125@4μs	125@4μs
Inrush Current (Peak and Duration) (A)	32.3@5ms	32.3@5ms
THDi	<3%	<3%
Maximum Output Overcurrent Protection (A)	125	125
Type of Voltage	a.c.	a.c.
AC Side (Back-up Port)		
Rated Apparent Power (kVA)	30	30
Max. Apparent Power (kVA)*7	Off-grid: 33(45.0, 10s), on-grid: 55.2	Off-grid: 33(45.0, 10s), on-grid:55.2

Technical Data	GW29.999K-ETA-G20	GW30K-ETA-G20
Nominal Voltage (V)	220/380, 230/400, 3L/N/PE	220/380, 230/400, 3L/N/PE
Nominal Frequency (Hz)	50/60	50/60
Frequency Range (Hz)	45~55 / 55~65	45~55 / 55~65
Rated Current (A)	45.5 @380V 43.5 @400V	45.5 @380V 43.5 @400V
Max. Current (A)*7	Off-grid: 50.0, on-grid: 80	Off-grid: 50.0, on-grid: 80
Max. Fault Current (Peak and Duration) (A)	125@4μs	125@4μs
Inrush Current (Peak and Duration) (A)	32.3@5ms	32.3@5ms
Maximum Overcurrent Protection (A)	125	125
THDv (@Linear Load)	<3%	<3%
On/Off-grid Switching Time（ms）	<4	<4
Efficiency		
Max. Efficiency	98.20%	98.20%
European Efficiency	97.40%	97.40%
Max. Battery to AC Efficiency	98.00%	98.00%
Protection		
PV String Current Monitoring	Integrated	Integrated

Technical Data	GW29.999K-ETA-G20	GW30K-ETA-G20
PV Insulation Resistance Detection	Integrated	Integrated
Residual Current Monitoring	Integrated	Integrated
PV Reverse Polarity Protection	Integrated	Integrated
Battery Reverse Polarity Protection	Integrated	Integrated
Anti-islanding Protection	Integrated	Integrated
AC Overcurrent Protection	Integrated	Integrated
AC Short Circuit Protection	Integrated	Integrated
AC Overvoltage Protection	Integrated	Integrated
DC Switch	Integrated	Integrated
DC Surge Protection	Type II(Type I+II optional)	Type II(Type I+II optional)
AC Surge Protection	Type II	Type II
Rapid Shutdown	Optional	Optional
AFCI	Optional	Optional
Remote Shutdown	Integrated	Integrated
General Data		
Power Factor	0.8 leading ... 0.8 lagging	0.8 leading ... 0.8 lagging
Operating Temperature Range (℃)	-35~+60	-35~+60

Technical Data	GW29.999K-ETA-G20	GW30K-ETA-G20
Operating Environment	Indoor/Outdoor	Indoor/Outdoor
Relative Humidity	0~100%	0~100%
Max. Operating Altitude (m)	4000 (>2000 derating)	4000 (>2000 derating)
Cooling Method	Smart Fan Cooling	Smart Fan Cooling
User Interface	LED, WLAN+APP	LED, WLAN+APP
Communication with BMS	CAN	CAN
Communication	RS485, WiFi+LAN+Bluetooth, 4G+Bluetooth(Optional)	RS485, WiFi+LAN+Bluetooth, 4G+Bluetooth(Optional)
Communication Protocols	Modbus-RTU, Modbus-TCP	Modbus-RTU, Modbus-TCP
Weight (kg)	38	38
Dimension (W×H×D mm)	800*340*270	800*340*270
Noise Emission (dB)	≤45	≤45
Topology	Non-isolated	Non-isolated
Self-consumption at Night (W)	≤10	≤10
Ingress Protection Rating	IP66	IP66
DC Connector	MC4, VACONN Terminal	MC4, VACONN Terminal
AC Connector	VACONN Terminal	VACONN Terminal

Technical Data	GW29.999K-ETA-G20	GW30K-ETA-G20
Environmental Category	4K4H	4K4H
Pollution Degree	III	III
Overvoltage Category	DC II / AC III	DC II / AC III
Protective Class	I	I
Storage Temperature (℃)	-40~+70	-40~+70
The Decisive Voltage Class (DVC)	Battery: C PV: C AC: C Com: A	Battery: C PV: C AC: C Com: A
Mounting Method	Wall/Floor Mounted	Wall/Floor Mounted
Active Anti-islanding Method*8	SMS(Slip-mode frequency) +AFD	SMS(Slip-mode frequency) +AFD
Type of Electrical Supply System	three phase	three phase
Country of Manufacture	China	China
Certification		
Grid Standard	Please refer to the official website	
Safety Regulation		
EMC		

*1: When the input voltage ranges from 950V to 1000V, the inverter will enter the standby mode, and the voltage returns to950V to enter the normal operation state.
*2: Please refer to the user manual for the MPPT Voltage Range at nominal Power.
*3: According to the local grid regulation.
*4: GOODWE ESA series has internal bypass 63A passthrough ability to supprt whole

home backup solution. If the customer don't want to do any breaker upgrade, the main breaker size in GoodWe commissioning APP can be set as previous breaker size.
*5： GOODWE ESA series has internal bypass 80A passthrough ability to supprt whole home backup solution. If the customer don't want to do any breaker upgrade, the main breaker size in GoodWe commissioning APP can be set as previous breaker size.
*6： If the backup port is not used, select an appropriate circuit breaker based on the AC maximum output current.
*7:"Off grid"means the energy of backup output only comes from PV and battery. "On grid"means the energy of the backup output includes the energy from grid or generator(on-grid) side.
*8: AFDPF: Active Frequency Drift with Positive Feedback

Technical Data	**GW5K-BTA-G20**	**GW6K-BTA-G20**	**GW8K-BTA-G20**	**GW9.999K-BTA-G20**
Battery Side				
Battery Type	Li-Ion	Li-Ion	Li-Ion	Li-Ion
Nominal Voltage (V)	750	750	750	750
Voltage Range (V)	700-950	700-950	700-950	700-950
Start-up Voltage (V)	720	720	720	720
Number of Battery Inputs	1	1	1	1
Max. Continuous Charging Current (A)	6.7	8.1	10.7	13.4

Technical Data	GW5K-BTA-G20	GW6K-BTA-G20	GW8K-BTA-G20	GW9.999K-BTA-G20
Max. Continuous Discharging Current (A)	7.4	8.9	11.8	14.7
Max. Charging Power (kW)	5	6	8	10
Max. Discharging Power (kW)	5.5	6.6	8.8	11
AC Side (On-Grid)				
Rated Power (kW)	5	6	8	9.999
Max. Power (kW)	5	6	8	9.999
Rated Apparent Power to Grid (kVA)	5	6	8	9.999
Rated Apparent Power from Grid (kVA)	5	6	8	9.999
Max. Apparent Power to Grid (kVA)	5	6	8	9.999
Max. Apparent Power from Grid (kVA)	43.5	43.5	43.5	43.5

Technical Data	GW5K-BTA-G20	GW6K-BTA-G20	GW8K-BTA-G20	GW9.999K-BTA-G20
Nominal Voltage (V)	220/380, 230/400, 3L/N/PE	220/380, 230/400, 3L/N/PE	220/380, 230/400, 3L/N/PE	220/380, 230/400, 3L/N/PE
Voltage Range (V)	180 ~ 260 (According to local standard)	180 ~ 260 (According to local standard)	180 ~ 260 (According to local standard)	180 ~ 260 (According to local standard)
Nominal Frequ ency (Hz)	50/60	50/60	50/60	50/60
Frequency Range (Hz)	45~55 / 55~65	45~55 / 55~65	45~55 / 55~65	45~55 / 55~65
Rated Current to Grid (A)	7.6 at 380V 7.3 at 400V	9.1 at 380V 8.7 at 400V	12.2 at 380V 11.6 at 400V	15.2 at 380V 14.5 at 400V
Rated Current fromGrid (A)	7.6 at 380V 7.3 at 400V	9.1 at 380V 8.7 at 400V	12.2 at 380V 11.6 at 400V	15.2 at 380V 14.5 at 400V
Max. Current to Grid (A)	7.6 at 380V 7.3 at 400V	9.1 at 380V 8.7 at 400V	12.2 at 380V 11.6 at 400V	15.2 at 380V 14.5 at 400V
Max. Current from Grid (A)	63.0	63.0	63.0	63.0
Max. Output Fault Current (Peak and Duration) (A)	46.7@4μs	46.7@4μs	46.7@4μs	74.6@4μs
Inrush Current (Peak and Duration) (A)	21.3@5ms	21.3@5ms	21.3@5ms	25.4@5ms
THDi	<3%	<3%	<3%	<3%

Technical Data	GW5K-BTA-G20	GW6K-BTA-G20	GW8K-BTA-G20	GW9.999K-BTA-G20
Maximum Output Overcurrent Protection (A)	46.7	46.7	46.7	74.6
Type of Voltage	a.c.	a.c.	a.c.	a.c.
Back-up Side				
Rated Output Apparent Power (kVA)	5	6	8	10
Max. Output Apparent Power (kVA)	Off-grid: 5.5 (10.0, 10s), on-grid: 43.5	Off-grid: 6.6(12, 10s), on-grid: 43.5	Off-grid: 8.8 (16.0, 10s), on-grid: 43.5	Off-grid: 11(20.0, 10s), on-grid: 43.5
Nominal Output Voltage (V)	220/380, 230/400, 3L/N/PE	220/380, 230/400, 3L/N/PE	220/380, 230/400, 3L/N/PE	220/380, 230/400, 3L/N/PE
Nominal Output Frequency (Hz)	50/60	50/60	50/60	50/60
Frequency Range (Hz)	45~55 / 55~65	45~55 / 55~65	45~55 / 55~65	45~55 / 55~65
Rated Output Current (A)	7.6 at 380V 7.3 at 400V	9.1 at 380V 8.7 at 400V	12.2 at 380V 11.6 at 400V	15.2 at 380V 14.5 at 400V
Max. Output Current (A)*3	Off-grid: 11.4, on-grid: 63	Off-grid: 13.7, on-grid:63	Off-grid: 18.2, on-grid: 63	Off-grid: 22.8, on-grid:63
Max. Output Fault Current (Peak and Duration) (A)	46.7@4μs	46.7@4μs	46.7@4μs	74.6@4μs

Technical Data	GW5K-BTA-G20	GW6K-BTA-G20	GW8K-BTA-G20	GW9.999K-BTA-G20
Inrush Current (Peak and Duration) (A)	21.3@5ms	21.3@5ms	21.3@5ms	25.4@5ms
Maximum Overcurrent Protection (A)	46.7	46.7	46.7	74.6
THDv (@Linear Load)	<3%	<3%	<3%	<3%
On/Off-grid Switching Time（ms）	<4	<4	<4	<4
Efficiency				
Max. Efficiency	98.00%	98.00%	98.00%	98.10%
European Efficiency	96.40%	96.90%	97.10%	97.20%
CEC Efficiency	NA	NA	NA	NA
Max. Battery to AC Efficiency	98.00%	98.00%	98.00%	98.00%
Protection				
Residual Current Monitoring	Integrated	Integrated	Integrated	Integrated
Battery Reverse Polarity Protection	Integrated	Integrated	Integrated	Integrated

Technical Data	GW5K-BTA-G20	GW6K-BTA-G20	GW8K-BTA-G20	GW9.999K-BTA-G20
Anti-islanding Protection	Integrated	Integrated	Integrated	Integrated
AC Overcurrent Protection	Integrated	Integrated	Integrated	Integrated
AC Short Circuit Protection	Integrated	Integrated	Integrated	Integrated
AC Overvoltage Protection	Integrated	Integrated	Integrated	Integrated
AC Surge Protection	Type II	Type II	Type II	Type II
Remote Shutdown	Integrated	Integrated	Integrated	Integrated
General Data				
Power Factor	0.8 leading ... 0.8 lagging	0.8 leading ... 0.8 lagging	0.8 leading ... 0.8 lagging	0.8 leading ... 0.8 lagging
Operating Temperature Range (℃)	-35~+60	-35~+60	-35~+60	-35~+60
Operating Environment	Indoor/Outdoor	Indoor/Outdoor	Indoor/Outdoor	Indoor/Outdoor
Relative Humidity	0~100%	0~100%	0~100%	0~100%
Max. Operating Altitude (m)	4000 (>2000 derating)	4000 (>2000 derating)	4000 (>2000 derating)	4000 (>2000 derating)

Technical Data	GW5K-BTA-G20	GW6K-BTA-G20	GW8K-BTA-G20	GW9.999K-BTA-G20
Cooling Method	Smart Fan Cooling	Smart Fan Cooling	Smart Fan Cooling	Smart Fan Cooling
User Interface	LED, WLAN+APP	LED, WLAN+APP	LED, WLAN+APP	LED, WLAN+APP
Communication with BMS	CAN	CAN	CAN	CAN
Communication	RS485, WiFi+LAN+Bluetooth, 4G+Bluetooth(Optional)	RS485, WiFi+LAN+Bluetooth, 4G+Bluetooth(Optional)	RS485, WiFi+LAN+Bluetooth, 4G+Bluetooth(Optional)	RS485, WiFi+LAN+Bluetooth, 4G+Bluetooth(Optional)
Communication Protocols	Modbus-RTU, Modbus-TCP	Modbus-RTU, Modbus-TCP	Modbus-RTU, Modbus-TCP	Modbus-RTU, Modbus-TCP
Weight (kg)	30	30	30	30
Dimension (W×H×D mm)	800*340*270	800*340*270	800*340*270	800*340*270
Noise Emission (dB)	≤35	≤35	≤35	≤35
Topology	Non-isolated	Non-isolated	Non-isolated	Non-isolated
Self-consumption at Night (W)	≤10	≤10	≤10	≤10
Conditional Short-circuit Current (A)	6000	6000	6000	6000
Ingress Protection Rating	IP66	IP66	IP66	IP66

Technical Data	GW5K-BTA-G20	GW6K-BTA-G20	GW8K-BTA-G20	GW9.999K-BTA-G20
DC Connector	MC4, VACONN Terminal	MC4, VACONN Terminal	MC4, VACONN Terminal	MC4, VACONN Terminal
AC Connector	VACONN Terminal	VACONN Terminal	VACONN Terminal	VACONN Terminal
Environmental Category	4K4H	4K4H	4K4H	4K4H
Pollution Degree	III	III	III	III
Overvoltage Category	DC II / AC III	DC II / AC III	DC II / AC III	DC II / AC III
Protective Class	I	I	I	I
Storage Temperature (℃)	-40~+70	-40~+70	-40~+70	-40~+70
The Decisive Voltage Class (DVC)	Battery: C	Battery: C	Battery: C	Battery: C
	AC: C	AC: C	AC: C	AC: C
	Com: A	Com: A	Com: A	Com: A
Mounting Method	Wall/Floor Mounted	Wall/Floor Mounted	Wall/Floor Mounted	Wall/Floor Mounted
Active Anti-islanding Method	SMS(Slip-mode frequency) +AFD*4	SMS(Slip-mode frequency) +AFD*4	SMS(Slip-mode frequency) +AFD*4	SMS(Slip-mode frequency) +AFD*4
Type of Electrical Supply System	three phase	three phase	three phase	three phase
Country of Manufacture	China	China	China	China

Technical Data	GW5K-BTA-G20	GW6K-BTA-G20	GW8K-BTA-G20	GW9.999K-BTA-G20
Certification				
Grid Standard	Please refer to the official website			
Safety Regulation				
EMC				

Technical Data	GW10K-BTA-G20	GW12K-BTA-G20	GW15K-BTA-G20	GW20K-BTA-G20
Battery Side				
Battery Type	Li-Ion	Li-Ion	Li-Ion	Li-Ion
Nominal Voltage (V)	750	750	750	750
Voltage Range (V)	700-950	700-950	700-950	700-950
Start-up Voltage (V)	720	720	720	720
Number of Battery Inputs	1	1	1	1
Max. Continuous Charging Current (A)	13.4	16.1	20.1	26.7
Max. Continuous Discharging Current (A)	14.7	17.7	22.1	29.4
Max. Charging Power (kW)	10	12	15	20

Technical Data	GW10K-BTA-G20	GW12K-BTA-G20	GW15K-BTA-G20	GW20K-BTA-G20
Max. Discharging Power (kW)	11	13.2	16.5	22
AC Side (On-Grid)				
Rated Power (kW)	10	12	15	20
Max. Power (kW)	10	12	15	20
Rated Apparent Power to Grid (kVA)	10	12	15	20
Rated Apparent Power from Grid (kVA)	10	12	15	20
Max. Apparent Power to Grid (kVA)	10	12	15	20
Max. Apparent Power from Grid (kVA)	43.5	43.5	43.5	43.5
Nominal Voltage (V)	220/380, 230/400, 3L/N/PE	220/380, 230/400, 3L/N/PE	220/380, 230/400, 3L/N/PE	220/380, 230/400, 3L/N/PE
Voltage Range (V)	180 ~ 260 (According to local standard)	180 ~ 260 (According to local standard)	180 ~ 260 (According to local standard)	180 ~ 260 (According to local standard)
Nominal Frequency (Hz)	50/60	50/60	50/60	50/60

Technical Data	GW10K-BTA-G20	GW12K-BTA-G20	GW15K-BTA-G20	GW20K-BTA-G20
Frequency Range (Hz)	45~55 / 55~65	45~55 / 55~65	45~55 / 55~65	45~55 / 55~65
Rated Current to Grid (A)	15.2 at 380V 14.5 at 400V	18.2 at 380V 17.4 at 400V	22.8 at 380V 21.8 at 400V	30.4 at 380V 29.0 at 400V
Rated Current fromGrid (A)	15.2 at 380V 14.5 at 400V	18.2 at 380V 17.4 at 400V	22.8 at 380V 21.8 at 400V	30.4 at 380V 29.0 at 400V
Max. Current to Grid (A)	15.2 at 380V 14.5 at 400V	18.2 at 380V 17.4 at 400V	22.8 at 380V 21.8 at 400V	30.4 at 380V 29.0 at 400V
Max. Current from Grid (A)	63.0	63.0	63.0	63.0
Max. Output Fault Current (Peak and Duration) (A)	74.6@4μs	74.6@4μs	83.3@4μs	83.3@4μs
Inrush Current (Peak and Duration) (A)	25.4@5ms	25.4@5ms	29.1@5ms	29.1@5ms
THDi	<3%	<3%	<3%	<3%
Maximum Output Overcurrent Protection (A)	74.6	74.6	83.3	83.3
Type of Voltage	a.c.	a.c.	a.c.	a.c.
Back-up Side				
Rated Output Apparent Power (kVA)	10	12	15	20

Technical Data	GW10K-BTA-G20	GW12K-BTA-G20	GW15K-BTA-G20	GW20K-BTA-G20
Max. Output Apparent Power (kVA)*6	Off-grid: 11(20.0, 10s), on-grid: 43.5	Off-grid: 13.2(24, 10s), on-grid: 43.5	Off-grid: 16.5(30, 10s), on-grid: 43.5	Off-grid: 22(30.0, 10s), on-grid: 43.5
Nominal Output Voltage (V)	220/380, 230/400, 3L/N/PE	220/380, 230/400, 3L/N/PE	220/380, 230/400, 3L/N/PE	220/380, 230/400, 3L/N/PE
Nominal Output Frequency (Hz)	50/60	50/60	50/60	50/60
Frequency Range (Hz)	45~55 / 55~65	45~55 / 55~65	45~55 / 55~65	45~55 / 55~65
Rated Output Current (A)	15.2 at 380V 14.5 at 400V	18.2 at 380V 17.4 at 400V	22.8 at 380V 21.8 at 400V	30.4 at 380V 29.0 at 400V
Max. Output Current (A)*3	Off-grid: 22.8, on-grid: 63	Off-grid: 27.3, on-grid: 63	Off-grid: 33.4, on-grid: 63	Off-grid: 33.4, on-grid: 63
Max. Output Fault Current (Peak and Duration) (A)	74.6@4μs	74.6@4μs	83.3@4μs	83.3@4μs
Inrush Current (Peak and Duration) (A)	25.4@5ms	25.4@5ms	29.1@5ms	29.1@5ms
Maximum Overcurrent Protection (A)	74.6	74.6	83.3	83.3
THDv (@Linear Load)	<3%	<3%	<3%	<3%

Technical Data	GW10K-BTA-G20	GW12K-BTA-G20	GW15K-BTA-G20	GW20K-BTA-G20
On/Off-grid Switching Time（ms）	<4	<4	<4	<4
Efficiency				
Max. Efficiency	98.10%	98.10%	98.10%	98.10%
European Efficiency	97.20%	97.20%	97.30%	97.30%
CEC Efficiency	NA	NA	NA	NA
Max. Battery to AC Efficiency	98.00%	98.00%	98.00%	98.00%
MPPT Efficiency	NA	NA	NA	NA
Protection				
Residual Current Monitoring	Integrated	Integrated	Integrated	Integrated
Battery Reverse Polarity Protection	Integrated	Integrated	Integrated	Integrated
Anti-islanding Protection	Integrated	Integrated	Integrated	Integrated
AC Overcurrent Protection	Integrated	Integrated	Integrated	Integrated

Technical Data	GW10K-BTA-G20	GW12K-BTA-G20	GW15K-BTA-G20	GW20K-BTA-G20
AC Short Circuit Protection	Integrated	Integrated	Integrated	Integrated
AC Overvoltage Protection	Integrated	Integrated	Integrated	Integrated
AC Surge Protection	Type II	Type II	Type II	Type II
Remote Shutdown	Integrated	Integrated	Integrated	Integrated
General Data				
Power Factor	0.8 leading ... 0.8 lagging	0.8 leading ... 0.8 lagging	0.8 leading ... 0.8 lagging	0.8 leading ... 0.8 lagging
Operating Temperature Range (℃)	-35~+60	-35~+60	-35~+60	-35~+60
Operating Environment	Indoor/Outdoor	Indoor/Outdoor	Indoor/Outdoor	Indoor/Outdoor
Relative Humidity	0~100%	0~100%	0~100%	0~100%
Max. Operating Altitude (m)	4000 (>2000 derating)	4000 (>2000 derating)	4000 (>2000 derating)	4000 (>2000 derating)
Cooling Method	Smart Fan Cooling	Smart Fan Cooling	Smart Fan Cooling	Smart Fan Cooling
User Interface	LED, WLAN+APP	LED, WLAN+APP	LED, WLAN+APP	LED, WLAN+APP

Technical Data	GW10K-BTA-G20	GW12K-BTA-G20	GW15K-BTA-G20	GW20K-BTA-G20
Communication with BMS	CAN	CAN	CAN	CAN
Communication	RS485, WiFi+LAN+Bluetooth, 4G+Bluetooth(Optional)	RS485, WiFi+LAN+Bluetooth, 4G+Bluetooth(Optional)	RS485, WiFi+LAN+Bluetooth, 4G+Bluetooth(Optional)	RS485, WiFi+LAN+Bluetooth, 4G+Bluetooth(Optional)
Communication Protocols	Modbus-RTU, Modbus-TCP	Modbus-RTU, Modbus-TCP	Modbus-RTU, Modbus-TCP	Modbus-RTU, Modbus-TCP
Weight (kg)	30	30	30	30
Dimension (W×H×D mm)	800*340*270	800*340*270	800*340*270	800*340*270
Noise Emission (dB)	≤35	≤35	≤40	≤40
Topology	Non-isolated	Non-isolated	Non-isolated	Non-isolated
Self-consumption at Night (W)	≤10	≤10	≤10	≤10
Conditional Short-circuit Current (A)	6000	6000	6000	6000
Ingress Protection Rating	IP66	IP66	IP66	IP66
DC Connector	MC4, VACONN Terminal	MC4, VACONN Terminal	MC4, VACONN Terminal	MC4, VACONN Terminal
AC Connector	VACONN Terminal	VACONN Terminal	VACONN Terminal	VACONN Terminal

Technical Data	GW10K-BTA-G20	GW12K-BTA-G20	GW15K-BTA-G20	GW20K-BTA-G20
Environmental Category	4K4H	4K4H	4K4H	4K4H
Pollution Degree	III	III	III	III
Overvoltage Category	DC II / AC III	DC II / AC III	DC II / AC III	DC II / AC III
Protective Class	I	I	I	I
Storage Temperature (℃)	-40~+70	-40~+70	-40~+70	-40~+70
The Decisive Voltage Class (DVC)	Battery: C	Battery: C	Battery: C	Battery: C
	AC: C	AC: C	AC: C	AC: C
	Com: A	Com: A	Com: A	Com: A
Mounting Method	Wall/Floor Mounted	Wall/Floor Mounted	Wall/Floor Mounted	Wall/Floor Mounted
Active Anti-islanding Method	SMS(Slip-mode frequency) +AFD*4	SMS(Slip-mode frequency) +AFD*4	SMS(Slip-mode frequency) +AFD*4	SMS(Slip-mode frequency) +AFD*4
Type of Electrical Supply System	three phase	three phase	three phase	three phase
Country of Manufacture	China	China	China	China
Certification				
Grid Standard				

Technical Data	GW10K-BTA-G20	GW12K-BTA-G20	GW15K-BTA-G20	GW20K-BTA-G20
Safety Regulation	Please refer to the official website			
EMC				

Technical Data	GW25K-BTA-G20	GW29.999K-BTA-G20	GW30K-BTA-G20
Battery Side			
Battery Type	Li-Ion	Li-Ion	Li-Ion
Nominal Voltage (V)	750	750	750
Voltage Range (V)	700-950	700-950	700-950
Start-up Voltage (V)	720	720	720
Number of Battery Inputs	1	1	1
Max. Continuous Charging Current (A)	33.3	40.0	40.0
Max. Continuous Discharging Current (A)	36.7	44.1	44.1
Max. Charging Power (kW)	25	30	30
Max. Discharging Power (kW)	27.5	33	33
AC Side (On-Grid)			
Rated Power (kW)	25	29.999	30

Technical Data	GW25K-BTA-G20	GW29.999K-BTA-G20	GW30K-BTA-G20
Max. Power (kW)	25	29.999	30
Rated Apparent Power to Grid (kVA)	25	29.999	30
Rated Apparent Power from Grid (kVA)	25	29.999	30
Max. Apparent Power to Grid (kVA)	25	29.999	30
Max. Apparent Power from Grid (kVA)	55.2	55.2	55.2
Nominal Voltage (V)	220/380, 230/400, 3L/N/PE	220/380, 230/400, 3L/N/PE	220/380, 230/400, 3L/N/PE
Voltage Range (V)	180 ~ 260 (According to local standard)	180 ~ 260 (According to local standard)	180 ~ 260 (According to local standard)
Nominal Frequenc y (Hz)	50/60	50/60	50/60
Frequency Range (Hz)	45~55 / 55~65	45~55 / 55~65	45~55 / 55~65
Rated Current to Grid (A)	37.9 at 380V 36.3 at 400V	45.5 at 380V 43.5 at 400V	45.5 at 380V 43.5 at 400V
Rated Current fromGrid (A)	37.9 at 380V 36.3 at 400V	45.5 at 380V 43.5 at 400V	45.5 at 380V 43.5 at 400V
Max. Current to Grid (A)	37.9 at 380V 36.3 at 400V	45.5 at 380V 43.5 at 400V	45.5 at 380V 43.5 at 400V
Max. Current from Grid (A)	80.0	80.0	80.0

Technical Data	GW25K-BTA-G20	GW29.999K-BTA-G20	GW30K-BTA-G20
Max. Output Fault Current (Peak and Duration) (A)	125@4μs	125@4μs	125@4μs
Inrush Current (Peak and Duration) (A)	32.3@5ms	32.3@5ms	32.3@5ms
THDi	<3%	<3%	<3%
Maximum Output Overcurrent Protection (A)	125	125	125
Type of Voltage	a.c.	a.c.	a.c.
Back-up Side			
Rated Output Apparent Power (kVA)	25	30	30
Max. Output Apparent Power (kVA)*6	Off-grid: 27.5(45.0, 10s), on-grid: 55.2	Off-grid: 33(45.0, 10s), on-grid: 55.2	Off-grid: 33(45.0, 10s), on-grid: 55.2
Nominal Output Voltage (V)	220/380, 230/400, 3L/N/PE	220/380, 230/400, 3L/N/PE	220/380, 230/400, 3L/N/PE
Nominal Output Frequency (Hz)	50/60	50/60	50/60
Frequency Range (Hz)	45~55 / 55~65	45~55 / 55~65	45~55 / 55~65
Rated Output Current (A)	37.9 at 380V 36.3 at 400V	45.5 at 380V 43.5 at 400V	45.5 at 380V 43.5 at 400V
Max. Output Current (A)*3	Off-grid: 50.0, on-grid: 80	Off-grid: 50.0, on-grid: 80	Off-grid: 50.0, on-grid: 80

Technical Data	GW25K-BTA-G20	GW29.999K-BTA-G20	GW30K-BTA-G20
Max. Output Fault Current (Peak and Duration) (A)	125@4μs	125@4μs	125@4μs
Inrush Current (Peak and Duration) (A)	32.3@5ms	32.3@5ms	32.3@5ms
Maximum Overcurrent Protection (A)	125	125	125
THDv (@Linear Load)	<3%	<3%	<3%
On/Off-grid Switching Time（ms）	<4	<4	<4
Efficiency			
Max. Efficiency	98.20%	98.20%	98.20%
European Efficiency	97.40%	97.40%	97.40%
CEC Efficiency	NA	NA	NA
Max. Battery to AC Efficiency	98.00%	98.00%	98.00%
Protection			
Residual Current Monitoring	Integrated	Integrated	Integrated
Battery Reverse Polarity Protection	Integrated	Integrated	Integrated
Anti-islanding Protection	Integrated	Integrated	Integrated

Technical Data	GW25K-BTA-G20	GW29.999K-BTA-G20	GW30K-BTA-G20
AC Overcurrent Protection	Integrated	Integrated	Integrated
AC Short Circuit Protection	Integrated	Integrated	Integrated
AC Overvoltage Protection	Integrated	Integrated	Integrated
AC Surge Protection	Type II	Type II	Type II
Remote Shutdown	Integrated	Integrated	Integrated
General Data			
Power Factor	0.8 leading ... 0.8 lagging	0.8 leading ... 0.8 lagging	0.8 leading ... 0.8 lagging
Operating Temperature Range (℃)	-35~+60	-35~+60	-35~+60
Operating Environment	Indoor/Outdoor	Indoor/Outdoor	Indoor/Outdoor
Relative Humidity	0~100%	0~100%	0~100%
Max. Operating Altitude (m)	4000 (>2000 derating)	4000 (>2000 derating)	4000 (>2000 derating)
Cooling Method	Smart Fan Cooling	Smart Fan Cooling	Smart Fan Cooling
User Interface	LED, WLAN+APP	LED, WLAN+APP	LED, WLAN+APP
Communication with BMS	CAN	CAN	CAN

Technical Data	GW25K-BTA-G20	GW29.999K-BTA-G20	GW30K-BTA-G20
Communication	RS485, WiFi+LAN+Bluetooth, 4G+Bluetooth(Optional)	RS485, WiFi+LAN+Bluetooth, 4G+Bluetooth(Optional)	RS485, WiFi+LAN+Bluetooth, 4G+Bluetooth(Optional)
Communication Protocols	Modbus-RTU, Modbus-TCP	Modbus-RTU, Modbus-TCP	Modbus-RTU, Modbus-TCP
Weight (kg)	32	32	32
Dimension (W×H×D mm)	800*340*270	800*340*270	800*340*270
Noise Emission (dB)	≤45	≤45	≤45
Topology	Non-isolated	Non-isolated	Non-isolated
Self-consumption at Night (W)	≤10	≤10	≤10
Conditional Short-circuit Current (A)	6000	6000	6000
Ingress Protection Rating	IP66	IP66	IP66
DC Connector	MC4, VACONN Terminal	MC4, VACONN Terminal	MC4, VACONN Terminal
AC Connector	VACONN Terminal	VACONN Terminal	VACONN Terminal
Environmental Category	4K4H	4K4H	4K4H
Pollution Degree	IV	IV	IV
Overvoltage Category	DC II / AC III	DC II / AC III	DC II / AC III

Technical Data	GW25K-BTA-G20	GW29.999K-BTA-G20	GW30K-BTA-G20
Protective Class	I	I	I
Storage Temperature (℃)	-40~+70	-40~+70	-40~+70
The Decisive Voltage Class (DVC)	Battery: C	Battery: C	Battery: C
	AC: C	AC: C	AC: C
	Com: A	Com: A	Com: A
Mounting Method	Wall/Floor Mounted	Wall/Floor Mounted	Wall/Floor Mounted
Active Anti-islanding Method	SMS(Slip-mode frequency) +AFD*4	SMS(Slip-mode frequency) +AFD*4	SMS(Slip-mode frequency) +AFD*4
Type of Electrical Supply System	three phase	three phase	three phase
Country of Manufacture	China	China	China
Certification			
Grid Standard	Please refer to the official website		
Safety Regulation			
EMC			

*1: When the input voltage ranges from 950V to 1000V, the inverter will enter the standby mode, and the voltage returns to950V to enter the normal operation state.
*2: Please refer to the user manual for the MPPT Voltage Range at nominal Power.
*3: The Max. Output Current in off-grid operation accounts for a three-phase maximum 150% unbalanced capability.
*4: AFDPF: Active Frequency Drift with Positive Feedback, AQDPF: Active Q Drift with Positive Feedback.

9.2 Battery Technical Data

Technical Data	GW5.1-BAT-D-G20	GW8.3-BAT-D-G20	GW5.1-BAT-D-G21	GW8.3-BAT-D-G21
Rated Energy (kWh)	5.12	8.32	5.12	8.32
Usable Energy (kWh)*1	5	8	5	8
Battery Type	LFP ($LiFePO_4$)			
Operating Voltage Range (V) (single phase system)	350~550			
Operating Voltage Range (V) (three phase system)	700~950			
Max. Input Current (System) (A)	12	19	12	19
Max. Output Current (System) (A)	13.2	21	13.2	21
Max. Input Power (System) (kW)*2	5	8	5	8
Max. Output Power (System) (kW)*2	5	8	5	8
Peak.Output Power (System) (kW)*2	7.5 @10s	12 @10s	7.5 @10s	12 @10s
Charging Temperature Range (°C)	-18~55		2~55	
Discharging Temperature Range (°C)	-20~55		-20~55	
Relative Humidity	5-95%			
Max. Operating Altitude (m)	4000			

Technical Data		GW5.1-BAT-D-G20	GW8.3-BAT-D-G20	GW5.1-BAT-D-G21	GW8.3-BAT-D-G21
Noise Emission (dB)		≤29			
Communication		CAN			
Weight (kg)		57.5±1	79±1	57.5±1	79±1
Dimensions (W×H×D mm)		800*326*270			
Optional Function Configuration		heating		/	
Ingress Protection		IP66			
Storage Temperature (℃)		-20 ~55			
Max. Storage time		12 months (-20℃~35℃)			
		6 months (35℃~45℃)			
Scalability		12 pcs			
Mounting Method		Floor stacked / Wall-mounted			
Cycle Life*3		≥8000			
Country of Manufacture		China			
Standard and Certification	Safety	IEC62619, IEC60730, EN62477, IEC63056, IEC62040, CE, CEC, VDE2510			
	EMC	CE, RCM			
	Transportation	UN38.3, ADR			

*1: Test conditions, 100% DOD (cell 2.85~3.6V voltage range), 0.2P charge & discharge at 25±2 °C for battery system at the beginning of life. Usable energy is defined by its initial design value. Actual available energy may vary depending on charge/discharge rate, environmental conditions (e.g. temperature), transport and storage factors.

*2: Max. Input Power /Max. Output Power/Peak.Output Power derating will occur related to Temperature and SOC.
*3: Based on test data under specific laboratory conditions.

Technical Data	GW6.0-BAT-D-G20	GW9.0-BAT-D-G20
Battery Type	LFP (LiFePO4)	
Rated Capacity (Ah)	314Ah	
Rated Energy (kWh)	6	9
Usable Energy (kWh)*1	5.8	8.7
Nominal Voltage(V) (Battery)	19.2	28.8
Voltage Range(V) (Battery)	16.2~21.9	24.3~32.8
Operating Voltage Range (V) (single phase system)	350~550	
Operating Voltage Range (V) (three phase system)	700~950	
Max. Input Current (System) (A)	7.1	10.7
Max. Output Current (System) (A)	7.9	11.8
Max. Input Power (System) (kW)*2	3	4.5
Max. Output Power (System) (kW)*2	3	4.5
Peak Output Power (System) (kW)*2	4.5 (10s)	6.75 (10s)
Charging Temperature Range(℃)	-20~55	
Discharging Temperature Range (℃)	-20~55	
Relative Humidity	4-100%	
Max. Operating Altitude (m)	4000	
Noise Emission (dB)	≤27	
Communication	CAN	
Weight (kg)	61±1	77±1

Technical Data		GW6.0-BAT-D-G20	GW9.0-BAT-D-G20
Useable Extinguishing Agent		CO_2, H_2O	
Crucial Material		$LiFePO_4$, C, Cu, $LiPF_6$, Al, $(C_3H_6)_n$	
Ingress Protection		IP66	
Protective Class		I	
Dimensions (W×H×D mm)		800*326*270	
Function Configuration		Heating (Integrated); Aerosol fire extinguishing (Integrated)	
Storage Temperature (℃)		-20 ~55	
Max. Storage time		12 months (-20℃~35℃) 6 months (35℃~45℃)	
Scalability*3		12P	
Mounting Method		Floor stacked / Wall-mounted / Grounded	
Cycle Life*4		≥10000	
Country of Manufacture		China	
Standard and Certification	Safety	IEC62619, IEC60730, EN62477, IEC63056, IEC62040, CE, CEC, Regulation 2023/1542 , VDE2510-50	
	EMC	CE, RCM	
	Transportation	UN38.3 ADR	

*1: Test conditions, 100% DOD (cell 2.85~3.6V voltage range), 0.2P charge & discharge at 25±2 °C for battery system at the beginning of life. Usable energy is defined by its initial design value. Actual available energy may vary depending on charge/discharge rate, environmental conditions (e.g. temperature), transport and storage factors.
*2: Max. Input Power /Max. Output Power/Peak.Output Power derating will occur related to Temperature and SOC.
*3: For single-column stacked installations, the maximum number of parallel units is 6.
*4: Based on test data under specific laboratory conditions.

9.3 STS Technical Data

Technical Data	GW30K-STS-G10	GW60K-STS-G10
Grid side		
Nominal Voltage (V)	220/380,230/400,240/415 , 3L/N/PE	220/380,230/400,240/415 , 3L/N/PE
Voltage Range (V)	114~280 (according to local standard)	114~280 (according to local standard)
Nominal Frequency (Hz)	50/60	50/60
Frequency Range (Hz)	45~55 / 55~65	45~55 / 55~65
Rated. Current (A)	45.5@380V 43.5@400V 41.6@415V	91.0@380V 87.0@400V 83.4@415V
Max. Current (A)	63.0	100.0
Rated Power (kW)	30	60
Rated Conditional Short-circuit Current (kA)	1	1
Back-up side		
Nominal Voltage (V)	220/380,230/400,240/415 , 3L/N/PE	220/380,230/400,240/415 , 3L/N/PE
Voltage Range (V)	114~280 (according to local standard)	114~280 (according to local standard)
Nominal Frequency (Hz)	50/60	50/60
Frequency Range (Hz)	45~55 / 55~65	45~55 / 55~65
Rated. Current (A)	45.5@380V 43.5@400V 41.6@415V	91.0@380V 87.0@400V 83.4@415V

Technical Data	GW30K-STS-G10	GW60K-STS-G10
Max. Current (A)	63.0	100.0
Rated Output Power (kW)	30	60
Max. Bypass Current (A)*1	63.0	100.0
Rated Conditional Short-circuit Current (kA)	1	1
Smart Port side		
Nominal Voltage (V)	220/380,230/400,240/415, 3L/N/PE	220/380,230/400,240/415, 3L/N/PE
Voltage Range (V)	114~280 (according to local standard)	114~280 (according to local standard)
Nominal Frequency (Hz)	50/60	50/60
Frequency Range (Hz)	45~55 / 55~65	45~55 / 55~65
Rated. Current (A)	45.5@380V 43.5@400V 41.6@415V	91.0@380V 87.0@400V 83.4@415V
Max. Current (A)	63.0	100.0
Rated Power (kW)	30	60
Rated Conditional Short-circuit Current (kA)	1	1
Inverter side		
Nominal Voltage (V)	220/380,230/400,240/415, 3L/N/PE	220/380,230/400,240/415, 3L/N/PE

Technical Data	GW30K-STS-G10	GW60K-STS-G10
Voltage Range (V)	114~280 (according to local standard)	114~280 (according to local standard)
Nominal Frequency (Hz)	50/60	50/60
Frequency Range (Hz)	45~55 / 55~65	45~55 / 55~65
Rated. Current (A)	45.5@380V 43.5@400V 41.6@415V	45.5@380V 43.5@400V 41.6@415V
Max. Current (A)	63.0	100.0
Rated Power (kW)	30	30
Rated Conditional Short-circuit Current (kA)	1	1
General Data		
On/Off Grid Transfer Time (ms)	≤4	≤4
Operating Temperature Range (℃)	-35~+60	-35~+60
Storage Temperature (℃)	-40~+70	-40~+70
Relative Humidity	0 ~ 100%	0 ~ 100%
Pollution Degree	III	III
Max. Operating Altitude (m)	4000	4000
Cooling Method	Natural Convection	Natural Convection
Communication	RS485	RS485
Weight (kg)	12.5	15
Dimension (W×H×D mm)	506*590*180	506*590*180
Mounting Method	Wall Mounted	Wall Mounted

Technical Data	GW30K-STS-G10	GW60K-STS-G10
Noise Emission (dB)	35	35
Ingress Protection Rating	IP54	IP54
Anti-corrosion Class	C4L	C4L
Overvoltage Category	III	III
Protective Class	I	I
Certification		
Safety Regulation	IEC 61439-1、IEC 61439-2 EN 61439-1、EN 61439-1	IEC 61439-1、IEC 61439-2 EN 61439-1、EN 61439-1

9.4 Smart Meter Technical Data

9.4.1 GM330

model	GM330
Measurement Range	
Supported Grid Types	1P2W/3P3W/3P4W
Operating voltage (Vac)*	3P4W：100~472 L-N 3P3W：100~472 L-L
Frequency (Hz)	50/60
CT ratio	nA: 5A
Accuracy Parameters	
voltage/current	Class 0.5
Active Energy	Class 0.5
Reactive Energy	Class 1

model	GM330
Communication Parameters	
Communication Method	RS485
Communication Distance (m)	1000
General Parameters	
Dimensions (W*H*D mm)	72*85*72
Housing	4-module
Weight (g)	240
Mounting Method	DIN Rail
User Interface	4 LEDs, Reset Button
Power Consumption (W)	＜5
Environmental Parameters	
IP Rating	IP20
Operating Temperature Range (°C)	-30-+70
Storage Temperature Range (°C)	-30-+70
Relative Humidity (non-condensing)	0-95%
Max. Operating Altitude (m)	3000

*Supports 1.1 times voltage access.
*The standard CT for the meter has been uniformly updated to the 120A:40mA specification. Meters equipped with the 200A:50mA specification CT will no longer be sold after June 2026.

9.4.2 GMK330

model	GMK330
Measurement Range	
Supported Grid Types	1P2W/3P3W/3P4W
Operating voltage (Vac)*	3P4W：90~264 L-N 3P3W：90~264 L-L
Frequency (Hz)	50/60
CT ratio	120A: 40mA 200A: 50mA*
Number of CTs	3
Accuracy Parameters	
voltage/current	Class 0.5
Active Energy	Class 0.5
Reactive Energy	Class 1
Communication Parameters	
Communication Method	RS485
Communication Distance (m)	1000
General Parameters	
Dimensions (W*H*D mm)	72*85*72
Housing	4-module
Weight (g)	240
Mounting Method	DIN Rail
User Interface	4 LEDs, Reset Button
Power Consumption (W)	＜5
Environmental Parameters	

model	GMK330
IP Rating	IP20
Operating Temperature Range (℃)	-30-+70
Storage Temperature Range (℃)	-30-+70
Relative Humidity (non-condensing)	0-95%
Max. Operating Altitude (m)	3000

*Supports 1.1 times rated voltage connection.
*The standard CT for the meter has been uniformly changed to the 120A:40mA specification. Meters equipped with CTs of the 200A:50mA specification will no longer be sold after June 2026.

9.5 Smart Dongle Technical Data

9.5.1 WiFi/LAN Kit-20

technical parameter		WiFi/LAN Kit-20
Output Voltage (V)		5
Power Consumption (W)		≤2
Communication Interface		USB
Communication Parameters	Ethernet	10M/100Mbps Auto-negotiation
	Wireless	IEEE 802.11 b/g/n @2.4 GHz
	Bluetooth	Bluetooth V4.2 BR/EDR and Bluetooth LE Standard
Mechanical Parameters	Dimensions (W×H×D mm)	48.3*159.5*32.1
	Weight (g)	82
	Ingress Protection Rating	IP65
	Mounting Method	USB Port Plug and Play
Operating Temperature Range (℃)		-30~+60
Storage Temperature Range (℃)		-40~+70

technical parameter	WiFi/LAN Kit-20
Relative Humidity	0-95%
Max. Operating Altitude (m)	4000

9.5.2 4G Kit-G20

Product Model	4G Kit-G20
Device Management	
Maximum Supported Inverter Quantity	1
Power Parameters	
Input Voltage (V)	5
Power Consumption (W)	≤5
Interface Method	USB
Communication Parameters	
4G/3G/2G	LTE-FDD: B1/2/3/4/5/7/8/12/13/18/19/20/25/26/28/66 LTE-TDD: B34/38/39/40/41 WCDMA: B1/2/4/5/6/8/19 GSM/EDGE: B2/3/5/8
GNSS Positioning	/
Bluetooth	Bluetooth V5.0
Mechanical Parameters	
Dimensions (Width × Height × Thickness mm)	48.3*328*32.3 (Including external antenna)
Weight (g)	100 (Including external antenna)
indicator	LED* 2
Mounting Method	Plug and Play
SIM Card Size	Micro sim, 15mm*12mm
Environmental Parameters	
Operating Temperature Range (℃)	-30~+65
Storage Temperature Range (℃)	-40~+70
Relative Humidity	0-100%

Product Model	4G Kit-G20
IP Rating	IP66
Max. Operating Altitude (m)	4000
Standards Met	
Certification	CE-RED (EN18031), RCM

10 Appendix

10.1 FAQ

10.1.1 How to conduct auxiliary detection for smart meters/CT?

The meter detection function can detect whether the meter CT is connected correctly and the current operating status of the meter and CT.

1. Navigate to the detection page via **[Home]** > **[Settings]** > **[Meter/CT Auxiliary Detection]**.
2. Click Start Detection, wait for the detection to complete, and then view the detection results.

10.1.2 How to Upgrade the Device Version

Through firmware information, you can view or upgrade:
The inverter's DSP version, ARM version, communication module software version, battery's BMS version, DCDC version, etc.

- **Prompt Upgrade:**

When the user opens the App, an upgrade prompt pops up on the home page. The user can choose whether to upgrade. If they choose to upgrade, they can complete the upgrade by following the on-screen instructions.

- **Regular Upgrade:**

Go to **[Home]** > **[Settings]** > **[Firmware Information]** to enter the firmware information viewing interface.
Click "Check for Updates". If a new version is available, complete the upgrade by following the on-screen instructions.

- **Forced Upgrade:**

The App pushes upgrade information. The user must upgrade according to the prompts; otherwise, the App cannot be used. Complete the upgrade by following the

on-screen instructions.

Inverter Software Version Upgrade

- The inverter supports software upgrade via a USB drive.
- Before using a USB drive to upgrade the device, please contact the after-sales service center to obtain the software upgrade package and upgrade method.

10.2 Explanation of Terms

- **Definition of Overvoltage Categories**
  - **Overvoltage Category I**: Equipment connected to circuits where measures are taken to limit transient overvoltages to a suitably low level.
  - **Overvoltage Category II**: Energy-consuming equipment supplied from a fixed electrical installation. This category includes appliances, portable tools, and other household and similar loads. If special requirements for reliability and suitability of such equipment exist, Overvoltage Category III applies.
  - **Overvoltage Category III**: Equipment in fixed electrical installations where special requirements for reliability and suitability must be met. This includes switching devices in fixed installations and industrial equipment permanently connected to fixed electrical installations.
  - **Overvoltage Category IV**: Equipment used at the origin of the electrical installation. This includes meters and primary overcurrent protection devices, etc.
- **Definition of Damp Location Categories**

Environmental Parameters	Level		
	3K3	4K2	4K4H
Temperature Range	0~+40℃	-33~+40℃	-33~+40℃
Humidity Range	5% to 85%	15% to 100%	4% to 100%

- **Definition of Environmental Categories:**
  - **Outdoor Inverter**: Ambient air temperature range from -25°C to +60°C, suitable for Pollution Degree 3 environments.
  - **Indoor Type II Inverter**: Ambient air temperature range from -25°C to +40°C, suitable for Pollution Degree 3 environments.
  - **Indoor Type I Inverter**: Ambient air temperature range from 0°C to +40°C,

suitable for Pollution Degree 2 environments.

- **Definition of Pollution Degree Categories**
  - **Pollution Degree 1**: No pollution or only dry, non-conductive pollution.
  - **Pollution Degree 2**: Normally only non-conductive pollution occurs. Temporary conductivity caused by condensation must be expected occasionally.
  - **Pollution Degree 3**: Conductive pollution occurs, or dry non-conductive pollution becomes conductive due to condensation.
  - **Pollution Degree 4**: Persistent conductive pollution occurs, for example, due to conductive dust, rain, or snow.

10.3 Battery SN Code Meaning

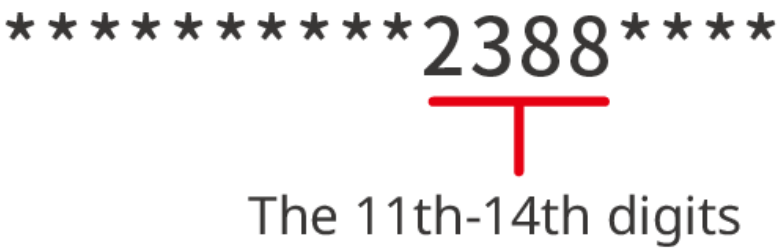

LXD10DSC0002

The 11th to 14th digits of the product SN code represent the production time code. The production date in the above image is 2023-08-08

- The 11th and 12th digits are the last two digits of the production year, e.g., 2023 is represented as 23;
- The 13th digit is the production month, e.g., August is represented as 8; Details are as follows:

Month	Jan-Sep	Oct	Nov	Dec
Month Code	1~9	A	B	C

- The 14th digit is the production date, e.g., the 8th day is represented as 8; Numbers are preferred for representation, e.g., 1~9 represent the 1st to 9th days, A represents the 10th day, and so on. Among them, the letters I and O are not used to avoid confusion. Details are as follows:

Production Day	1	2	3	4	5	6	7	8	9

Code	1	2	3	4	5	6	7	8	9

Production Date	10	11	12	13	14	15	16	17	18
Code	A	B	C	D	E	F	G	H	J

Production Date	21	22	23	24	25	26	27	28	29
Code	M	N	P	Q	R	S	T	U	V

11 Contact Information

GoodWe Technologies Co., Ltd.
90 Zijin Road, Suzhou New District, China
400-998-1212
www.goodwe.com
service@goodwe.com